NOTES:

1. MINIMUM 5" NEMA APPROVED PVC SCHEDULE 80 SHALL BE USED.
2. ATTACH CONDUIT ON SIDE OF POLE AWAY FROM TRAFFIC WHEN POSSIBLE.
3. INSTALLL LOWEST STANDOFF BRACKET AT 7 FEET ABOVE GRADE. SPACE REMAINING STANDOFF BRACKETS APPROX. 5 FEET APART.
4. INSTALL SLIP JOINT APPROXIMATELY 2/3 OPEN.
5. TERMINATE CONDUIT WITH CONDULATOR FOR PRIMARY CABLE, OR WEATHERHEAD FOR SECONDARY CABLE.

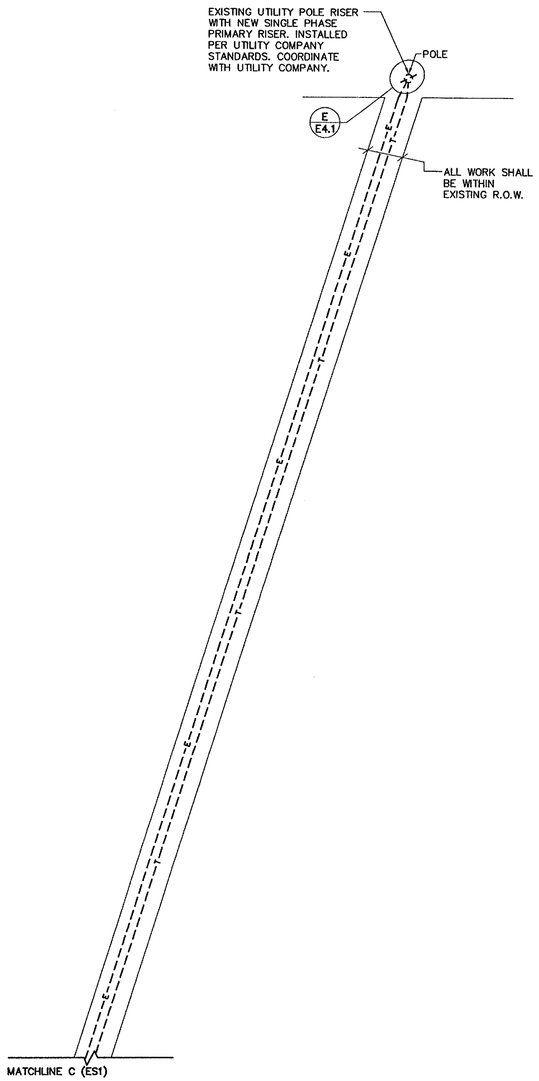

SERVICE FROM UTILITY POLE

SCALE: 40' = 1'-0"

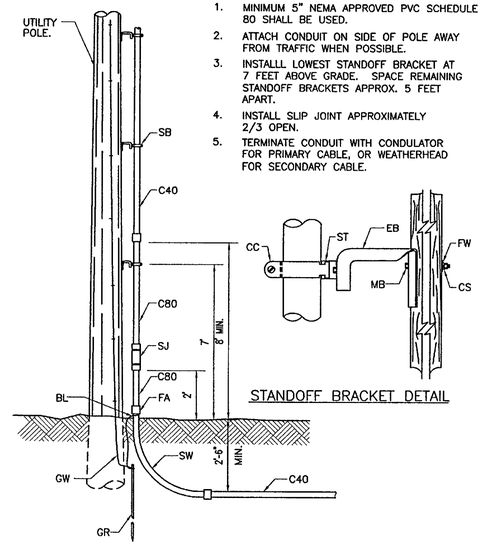

STANDOFF BRACKET DETAIL

ITEM	NO REQUIRED	CODE	MATERIAL
SJ	1		SLIP JOINT
SB	*		STANDOFF BRACKET
C80	10 FT.		CONDUIT (SCHEDULE 80) 5"
C40	*		CONDUIT (SCHEDULE 40) 5"
SW	1		90° STEEL SWEEP 5"
FA	1		FEMALE ADAPTER
BL	1		BONDING LUG
GR	1		GROUND ROD
GW	*		GROUND WIRE
ST	10 FT.		GALVANIZED STEEL CONDUIT

MATERIAL FOR ONE STANDOFF BRACKET			
ITEM	NO REQUIRED	CODE	MATERIAL
FW	1		FLAT WASHER 2"x2"
CS	1		COIL SPRING WASHER
REB	1		RACK EXTENSION BRACKET
ST	1		STRUT (CUT TO LENGTH)
CC	1		CONDUIT CLAMP
MB	1		MACHINE BOLT 5/8"

PRIMARY RISER INSTALLATION DETAIL (A / E4.2)

NOT TO SCALE

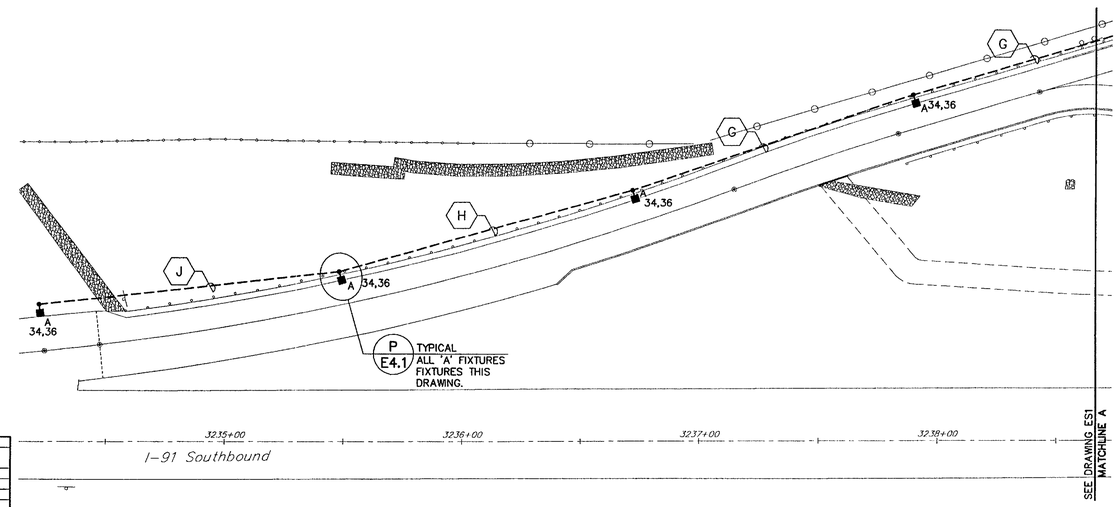

ACCELERATION LANE SITE LIGHTING PLAN

SCALE: 30' = 1'-0"

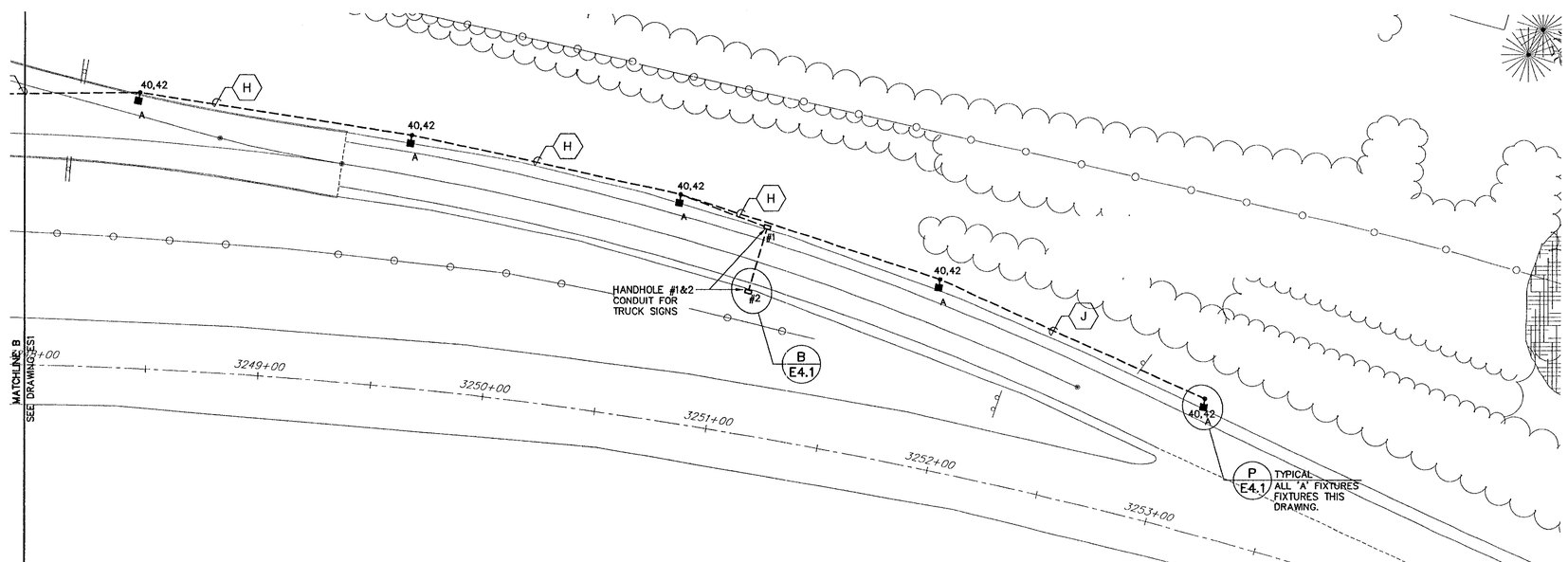

DECELERATION LANE SITE LIGHTING PLAN

SCALE: 30' = 1'-0"

STATE OF VERMONT ROBERT F. KACHIKO 3595 1-11-02 PROFESSIONAL ENGINEER

NORTHERN ARCHITECTS

207 KING STREET
SUITE 3
BURLINGTON, VERMONT
05401-4502

802-658-1953

CONSULTANTS

CIVIL
KREBS AND LANSING
10 Main Street
Colchester VT 05446
(802)-878-0375

LANDSCAPE ARCHITECT
OHKW
OFFICE OF H. KEITH WAGNER
7 Marble Ave.
Burlington VT 05401
(802)-864-0010

STRUCTURAL
RICHARD M. DOHERTY, P.E.
117 St. Paul Street
Burlington VT 05401
(802)-660-4212

PLUMBING, MECHANICAL, AND ELECTRICAL
DUFRESNE-HENRY
Precision Park
North Springfield VT 05150-0029
(802)-886-2261

REVISIONS

PROJECT

DERBY WELCOME CENTER
PROJECT #IM 091-3(8)

NEW FACILITY

DERBY
VERMONT

DATE:	01/07/02
SCALE:	AS SHOWN
CHECKED:	
PROJECT NO:	2003

SITE LIGHTING PLAN

ES2

N:\Vermont - State of\Derby Welcome Center\Electrical\ES1-SP.dwg, Layout1, 01/04/2002 03:08:29 PM, mcrowley