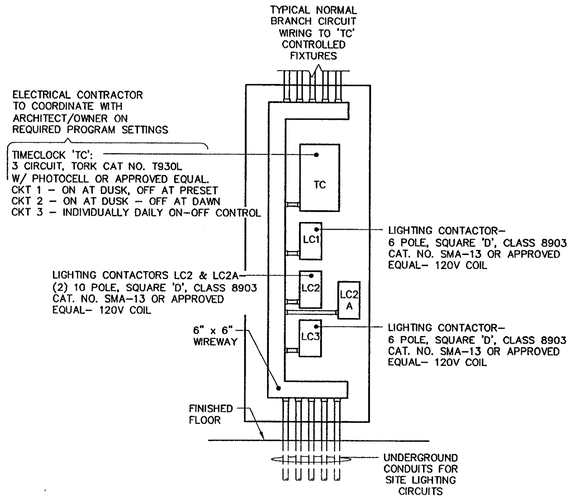

LIGHTING CONTROL DIAGRAM (A / E1.1)

NOT TO SCALE

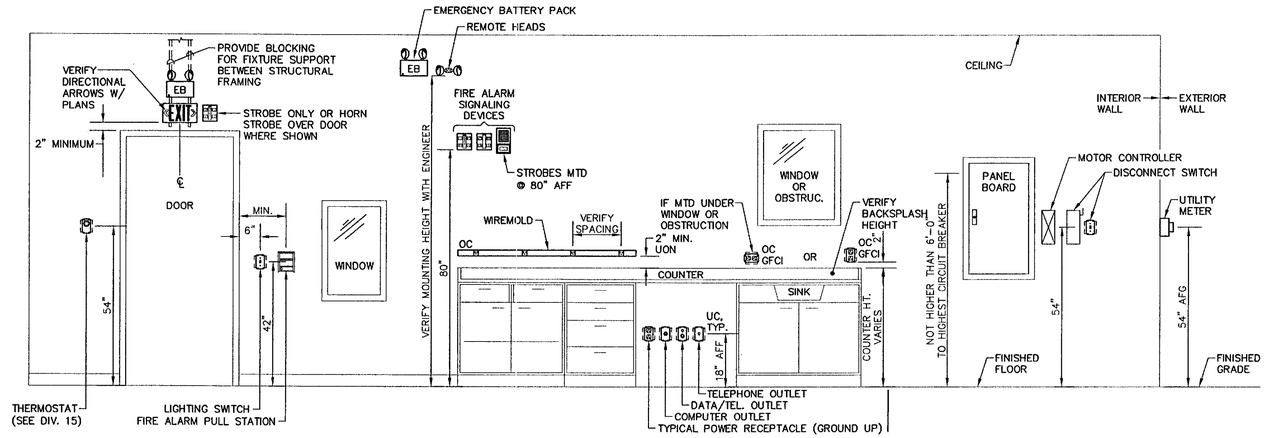

ELEVATION – TYPICAL DEVICE MOUNTING HEIGHTS

NOT TO SCALE (Not all devices may be used.)

ABBREVIATIONS	
AFF – ABOVE FINISHED FLOOR	MTD – MOUNTED
AFG – ABOVE FINISHED GRADE	OC – OVER COUNTER
EB – EMERGENCY BATTERY PACK	UC – UNDER COUNTER
GFCI – GROUND FAULT CIRCUIT INTERUPTER	UON – UNLESS OTHERWISE NOTED
MH – MOUNTING HEIGHT	WP – WEATHERPROOF
MTG – MOUNTING	

VERIFY COMBINATION OUTLETS W/ PLANS

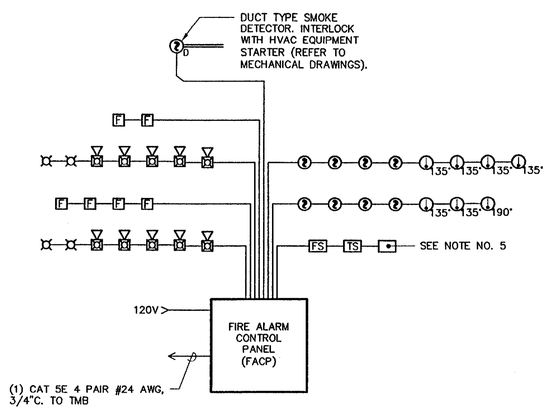

FIRE ALARM RISER DIAGRAM

NO SCALE

FIRE ALARM WORK NOTES:

1. ACTUAL NUMBER OF SMOKE AND HEAT DETECTORS IS NOT SHOWN. REFER TO ELECTRICAL AND MECHANICAL PLANS FOR EXACT QUANTITIES.

2. MAXIMUM OF 11 AUDIO/VISUAL DEVICES PER CIRCUIT.

3. CORRIDOR AUDIO/VISUAL (STROBE TYPE) NOTIFICATION DEVICES SHALL BE SYNCHRONIZED.

4. ALL WIRING SHALL BE IN CONDUIT.

5. TIE INTO COMPRESSOR (DRY-SPRINKLER) ALARM (COMPRESSOR FAILURE).

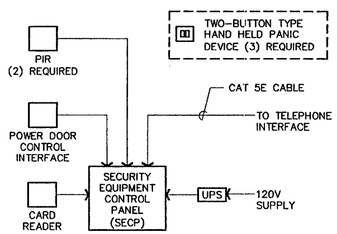

SECURITY/ ACCESS CONTROL SYSTEM DIAGRAM

NOT TO SCALE

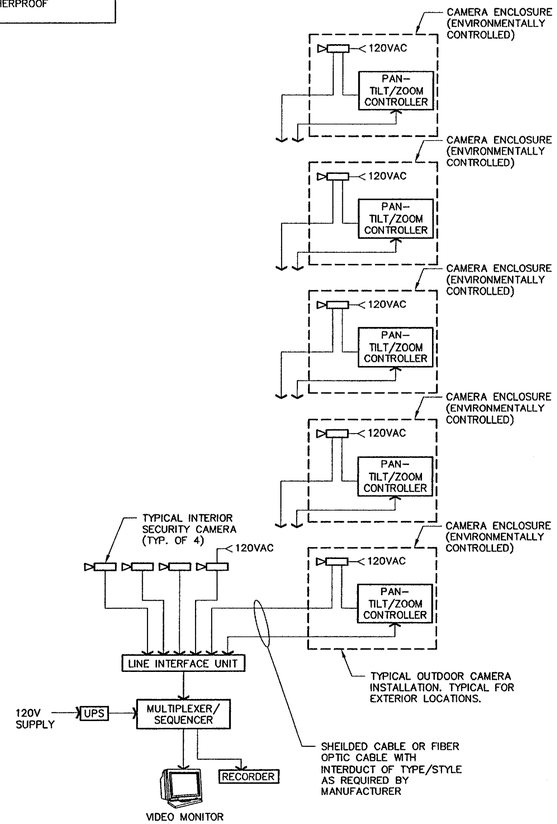

SURVEILLANCE SYSTEM DIAGRAM

NOT TO SCALE

NOTES:

1. EACH CAMERA SHALL BE CONTROLLED INDEPENDENTLY OF EACH OTHER THROUGH CODED ADDRESS COMMAND.

2. WIRING SHALL BE IN CONDUIT. UTILIZE EITHER RGS CONDUIT FOR EXTERIOR WITH COPPER CABLE OR PVC CONDUIT MAY BE USED IF FIBER OPTIC CABLE IS PROVIDED. FIBER CABLE SHALL BE INSTALLED WITH 1" INNER DUCT SYSTEM. ALL WIRING SHALL BE OF APPROVED TYPE/STYLE AS REQUIRED BY THE MANUFACTURER AND AS APPROVED BY STATE OF VERMONT.

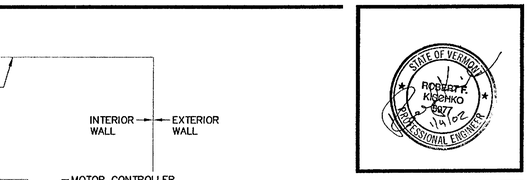

NORTHERN ARCHITECTS

207 KING STREET
SUITE 3
BURLINGTON, VERMONT
05401-4502

802-658-1953

CONSULTANTS

CIVIL
KREBS AND LANSING
10 Main Street
Colchester VT 05446
(802)-878-0575

LANDSCAPE ARCHITECT
OHKW
OFFICE OF H. KEITH WAGNER
7 Marble Ave.
Burlington VT 05401
(802)-864-0010

STRUCTURAL
RICHARD M. DOHERTY, P.E.
117 St. Paul Street
Burlington VT 05401
(802)-660-4212

PLUMBING, MECHANICAL, AND ELECTRICAL
DUFRESNE-HENRY
Precision Park
North Springfield VT 05150-0029
(802)-886-2261

REVISIONS

PROJECT

DERBY WELCOME CENTER
PROJECT #IM 091-3(8)

NEW FACILITY

DERBY
VERMONT

DATE: 01/07/02
SCALE: AS SHOWN
CHECKED:
PROJECT N0: 2003

SPECIAL SYSTEMS DIAGRAMS AND MISC. DETAILS

E4.2

N:\Vermont - State of\Derby Welcome Center\Electrical\E4.2-DT.dwg, Layout1, 01/04/2002 02:20:34 PM, mcrowley