DOOR SCHEDULE

FLOOR	DOOR NO.	SIZE WIDTH	SIZE HEIGHT	SIZE THICK	DOOR ELEV	DOOR MAT	FRAME TYPE	FRAME MAT	DETAILS JAMB	DETAILS HEAD	DETAILS THR	HDW. SET	STOP	U.L. LABEL	REMARKS
FIRST FLOOR	100A	9'-5"	8'-0"		A	AL/GLASS	---	AL	NOTE #4	4/A5.3	5/A5.3	2A	---	---	NOTE #3
	100B	9'-5"	8'-0"	---	A.1	AL/GLASS	---	AL	NOTE #4	11/A5.3	---	3	---	---	NOTE #3
	101A	11'-6 1/2"	8'-0"	2-1/4"	E	WD/GLASS	---	---	9/A4.7	1/A5.1	4/A5.1	6	---	---	NOTE #7, #9
	101B	6'-8"	4'-3"	2-1/4"	L	WD/GL	---	---	1/A5.4	1/A5.1	---	6	---	---	NOTE #9
	101C	9'-5"	8'-0"	---	A.2	AL/GLASS	---	AL	NOTE #4	4/A5.3	5/A5.3	2	---	---	
	101D	3'-2 1/4"	3'-7"	2-1/4"	E/AB.1	WD.	---	WD.	15/A5.2	3/A8.2	3/A8.2	17	---	---	NOTE #8, #10
	102A	5'-2"	8'-0"	---	B	AL/GLASS	---	AL	NOTE #4	4/A5.3	9/A5.3	1	FLR	---	NOTE #3, #4
	102B	3'-0"	7'-10"	2-1/4"	H	WD	1	WD	18/A5.2	18/A5.2	---	5	HINGE/CLSR	---	
	103A	3'-0"	7'-0"	1-3/4"	J	WD	2	WD	5/A5.2	5/A5.2	---	4A	WALL	---	
	104A	3'-0"	7'-0"	1-3/4"	J	WD	2	WD	5/A5.2	5/A5.2	---	4	WALL	---	
	105A	3'-0"	7'-0"	1-3/4"	J	WD	2	WD	5/A5.2	5/A5.2	---	4A	WALL	---	
	108A	3'-0"	7'-10"	2-1/4"	H	WD	1	WD	9/A5.2	4/A5.2	---	9	WALL/CLSR	---	
	109A	3'-0"	7'-10"	2-1/4"	H	WD	1	WD	6,11/A5.2	1/A5.2		10	MAG	---	NOTE #1
	110A	4'-0"	8'-0"	2-1/4"	K	WD	---	---	---	3/A5.1,8/A5.4	4&6/A5.1	7	---	---	NOTE #6
	111A	3'-0"	7'-10"	2-1/4"	H	WD	1	WD	7,12/A5.2	2/A5.2	---	11	WALL		
	111B	3'-0"	7'-10"	2-1/4"	H	WD	1	WD	12,17/A5.2	2/A5.2	---	11	HINGE/CLSR	---	
	112A	4'-0"	8'-0"	2-1/4"	K, O.H.	WD	---	---	---	8/A5.1&8/A5.4	4&6/A5.1	7	---	---	NOTE #6
	113A	3'-0"	7'-10"	2-1/4"	H	WD	1	WD	11,16/A5.2	11/A5.2 O.H.	---	10	MAG	---	NOTE #1
	114A	3'-0"	7'-10"	2-1/4"	H	WD	1	WD	19/A5.2	14/A5.2	---	4	WALL	---	
	115A	3'-0"	7'-10"	2-1/4"	H	WD	1	WD	13/A5.2	3/A5.2	---	8	WALL	---	
	115B	3'-0"	7'-0"	1-3/4"	G	HM	4	HM	NOTE #4	1/A5.5	6/A5.5	12	FLR	---	
ATTIC	200A	3'-0"	5'-9"	2-1/4"	H	WD	3	WD	9/A5.2 SIM.,O.H.	10/A5.2	---	13	FLR	---	
	201A	6'-0"	5'-3 1/2"	1-3/4"	M	HM	5	HM	17/A5.5	11/A5.5	16/A5.5	14	FLR	---	NOTE #2, #5
MAINTENANCE BLDG.	300A	3'-0"	7'-10"	2-1/4"	H	WD	6	HM	2,7,12/A5.5	1/A5.5, SIM.	6/A5.5 SIM	12	FLR	---	
	300B	8'-0"	8'-0"	2-3/4"	D	WD	---	---	NOTE #4	5/A5.4	10/A5.4	15	---	---	NOTE #7
PICNIC PAVILION	400A	7'-0"	7'-10"	2-1/4"	C	WD	---	---	4,9/A5.4	12/A5.4	---	16	---	---	

NOTES:
#1. DOOR IS ON MAGNETIC HOLD OPEN. DOOR TO BE IN OPEN POSITION WHENEVER TOILET FACILITY IS ACCESSIBLE.
#2. SEE PLAN FOR ACTIVE/INACTIVE LEAF.
#3. FRAME TYPE AS PER ELEVATION.
#4. SEE ELEVATION FOR JAMB DETAILS.
#5. FIELD VERIFY FINAL HEIGHT DIMENSION.
#6. SEE 1/A3.2 FOR DIRECTION OF CROSS BRACE.
#7. DOOR THICKNESS, IF SHOWN, IS A MINIMUM. MANUF. TO PROVIDE UNIT IN THICKNESS AS REQ'D TO MEET AWI PREMIUM GRADE REQUIRMENTS IN CONFIGURATION AS SHOWN. CONTRACTORS RESPONSIBILITY TO COORDINATE ALL ITEMS RELATING TO FINAL DOOR SIZE.
#8. SEE SHEET A8.1 FOR DOOR LOCATION.
#9. FIELD VERIFY FINAL SIZES OF ALL SLIDING DOORS AS PER MANUFACTURERS STANDARD DETAILS AND CONSTRUCTION METHODS.
#10. FIELD VERIFY FINAL HEIGHT WITH INSTALLED FLOOR FINISHES.

STOP DESIGNATIONS:
FLR. FLOOR TYPE
CLSR. CLOSER TYPE
WALL WALL TYPE
MAG. MAGNETIC HOLD OPEN
HINGE HINGE STOP

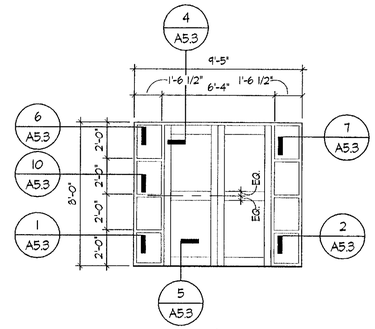

A
EXT. ALUMINUM STOREFRONT AND SIDELIGHTS
THERMALLY BROKEN
ALL GLASS TO BE SAFETY TEMPERED

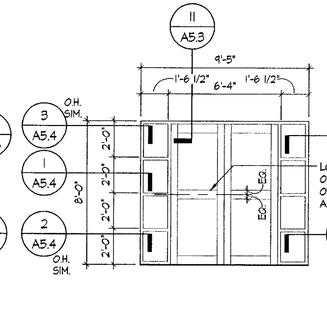

A.1
INT. ALUMINUM STOREFRONT AND SIDELIGHTS
THERMALLY BROKEN
ALL GLASS TO BE SAFETY TEMPERED

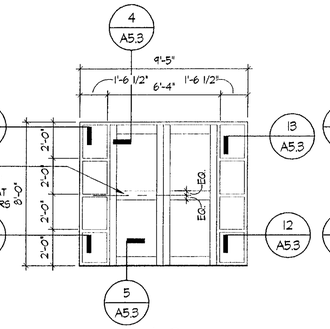

A.2
EXT. ALUMINUM STOREFRONT AND SIDELIGHTS
THERMALLY BROKEN
ALL GLASS TO BE SAFETY TEMPERED

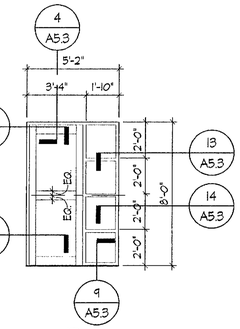

B
ALUMINUM STOREFRONT AND SIDELIGHTS
THERMALLY BROKEN
ALL GLASS TO BE SAFETY TEMPERED

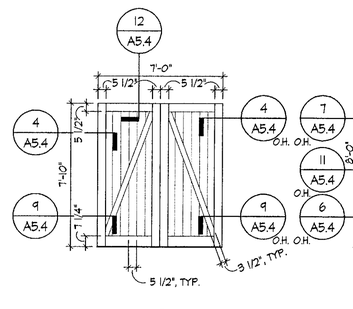

C
EXT. WOOD CARRIAGE DOOR

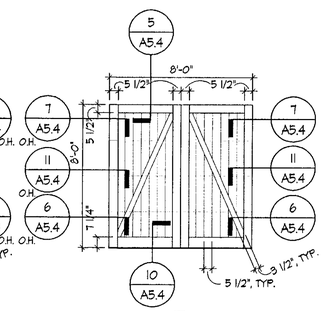

D
EXT. WOOD SECTIONAL OVERHEAD DOOR

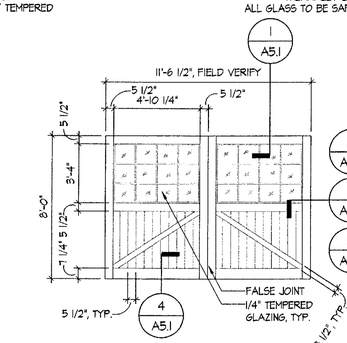

E
INTERIOR WOOD POCKET DOOR

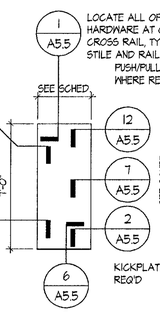

G
INSUL. EXT. HOLLOW METAL DOOR

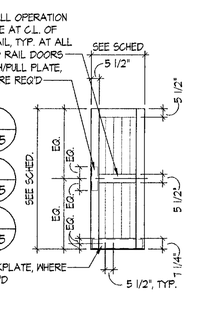

H
INT./EXT. WOOD DOOR
SEE DOOR SCHEDULE FOR DETAILS

F
NOT USED

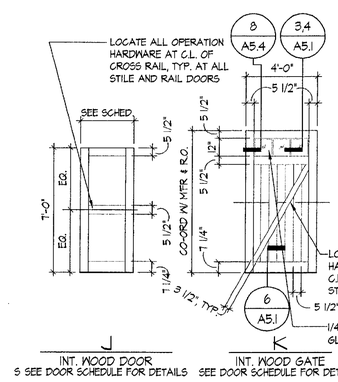

J
INT. WOOD DOOR
SEE DOOR SCHEDULE FOR DETAILS

K
INT. WOOD GATE
SEE DOOR SCHEDULE FOR DETAILS

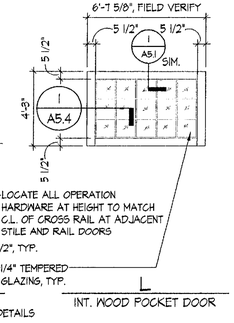

L
INT. WOOD POCKET DOOR

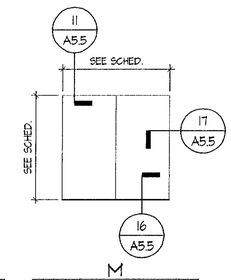

M
HOLLOW METAL DOOR

DOOR TYPES
SCALE: 1/4" = 1'-0"
2003_ELEV-DOOR

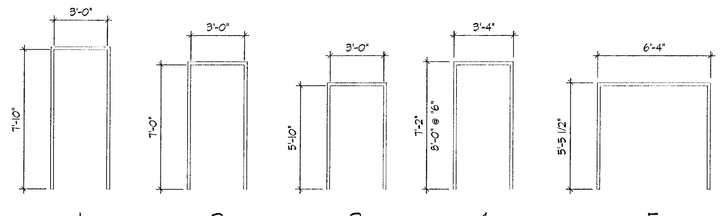

1 WOOD
2 WOOD
3 WOOD
4 HOLLOW METAL
5 HOLLOW METAL
6 HOLLOW METAL

FRAME TYPES
SCALE: 1/4" = 1'-0"
2003_ELEV-DOOR

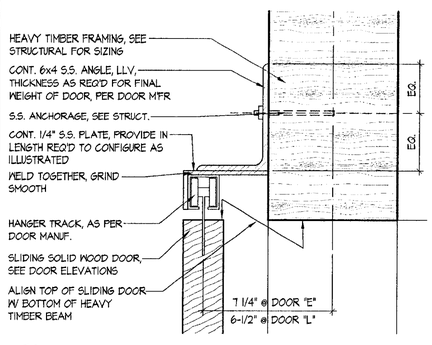

1 SLIDING DOOR HEAD
SCALE: 3" = 1'-0"
2003_B505

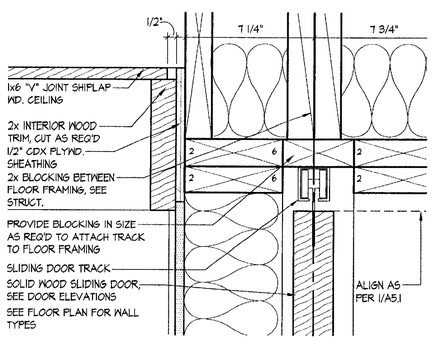

2 SLIDING DOOR HEAD
SCALE: 3" = 1'-0"
2003_B503

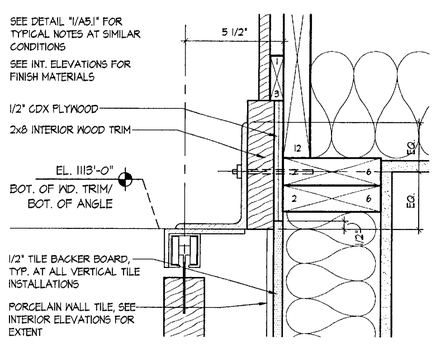

3 SLIDING DOOR HEAD
SCALE: 3" = 1'-0"
2003_B513

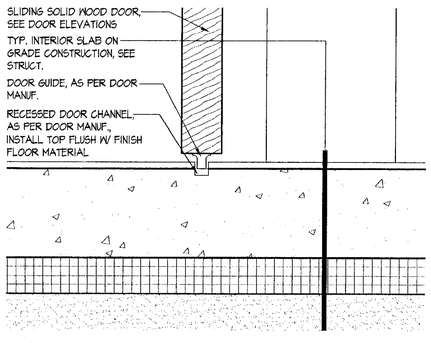

4 SLIDING DOOR SILL
SCALE: 3" = 1'-0"
2003_B505

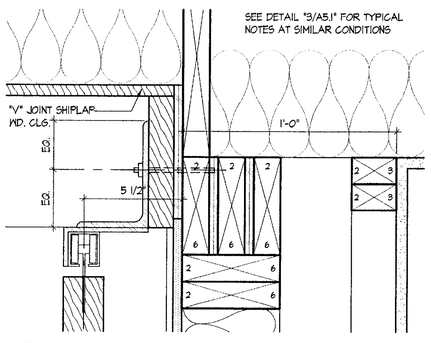

4 SLIDING DOOR HEAD
SCALE: 3" = 1'-0"
2003_DTL-DR02

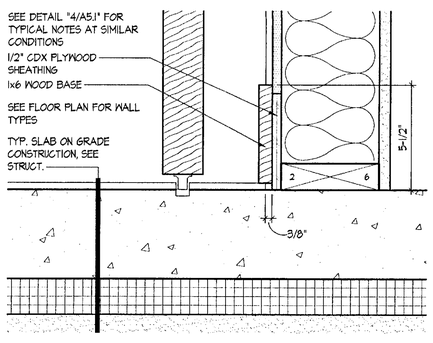

6 SLIDING DOOR SILL
SCALE: 3" = 1'-0"
2003_B513

REGISTERED ARCHITECT ROBERT R. FOSTER NO. 1378 STATE OF VERMONT

NORTHERN ARCHITECTS
207 KING STREET
SUITE 3
BURLINGTON, VERMONT
05401-4502

802-658-1953

CONSULTANTS
CIVIL
KREBS AND LANSING
10 Main Street
Colchester VT 05446
(802)-878-0375
LANDSCAPE ARCHITECT
OHKW
OFFICE OF H. KEITH WAGNER
7 Marble Ave.
Burlington VT 05401
(802)-864-0010
STRUCTURAL
RICHARD M. DOHERTY, P.E.
171 St. Paul Street
Burlington VT 05401
(802)-660-9212
PLUMBING, MECHANICAL, AND ELECTRICAL
DUFRESNE AND HENRY
Precision Park
North Springfield VT 05150-0029
(802)-886-2261

REVISIONS

PROJECT

DERBY WELCOME CENTER
PROJECT #IM 091-3(8)

NEW FACILITY

DERBY
VERMONT

DATE:	01/07/2002
SCALE:	AS NOTED
CHECKED:	HS
PROJECT NO:	2003

DOOR SCHEDULE / TYPES AND DETAILS

A5.1

© NORTHERN ARCHITECTS INC., ALL RIGHTS RESERVED 2002