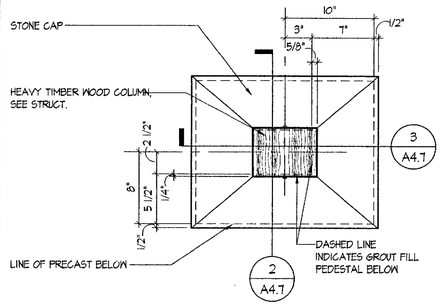

1 COLUMN PLAN

SCALE: 1-1/2" = 1'-0" 2003_DTL-ARCH02

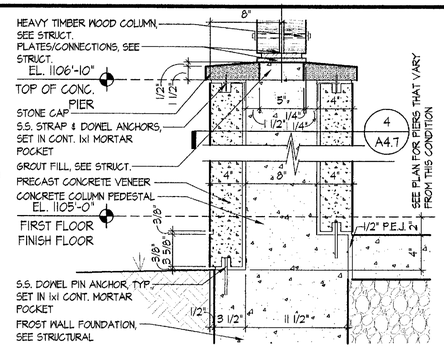

2 COLUMN SECTION

SCALE: 1-1/2" = 1'-0" 2003_DTL-ARCH02

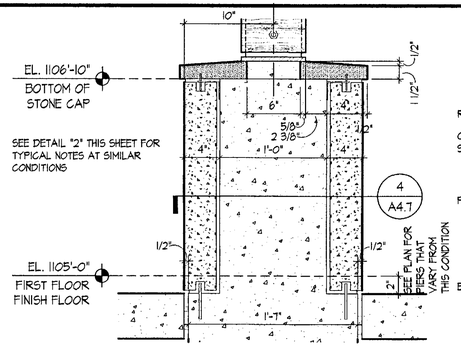

3 COLUMN SECTION

SCALE: 1-1/2" = 1'-0" 2003_DTL-ARCH02

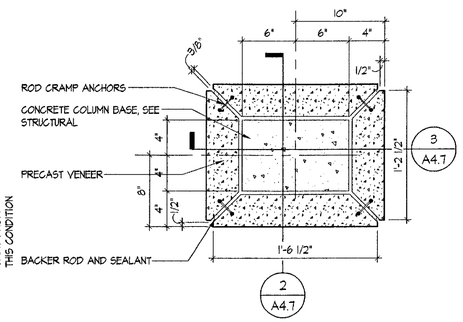

4 COLUMN SECTION

SCALE: 1-1/2" = 1'-0" 2003_DTL-ARCH02

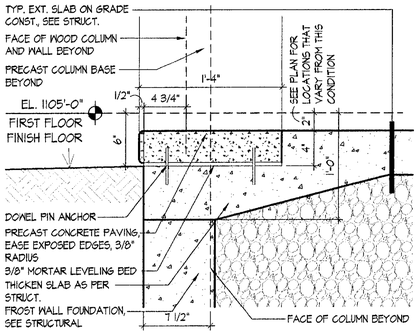

5 PRECAST DTL. AT SLAB EDGE

SCALE: 1-1/2" = 1'-0" 2003_DTL-ARCH02

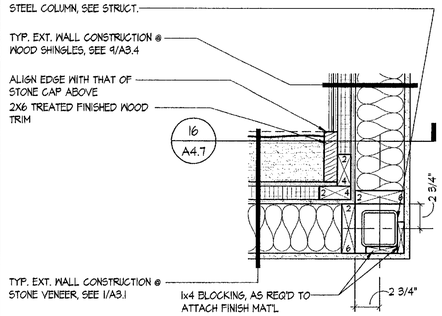

6 CORNER DTL. @ WOOD SHINGLES

SCALE: 1-1/2" = 1'-0" 2003_DTL-ARCH02

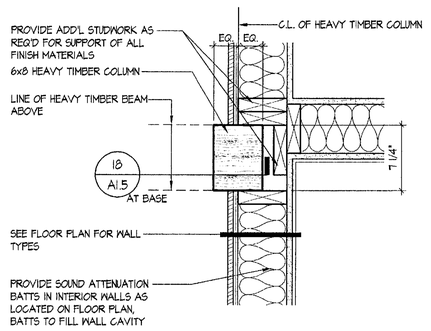

7 INTERIOR COLUMN DETAIL

SCALE: 1-1/2" = 1'-0" 2003_DTL-ARCH02

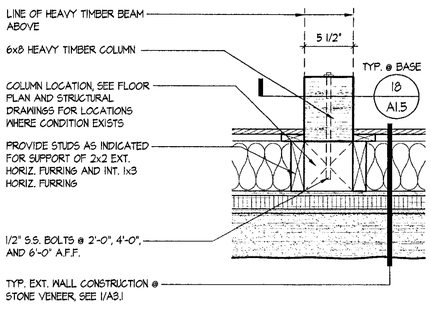

8 INTERIOR COLUMN DETAIL

SCALE: 1-1/2" = 1'-0" 2003_DTL-ARCH02

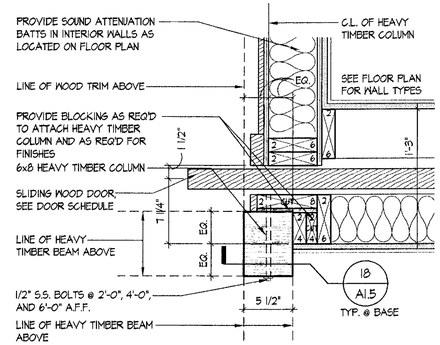

9 INTERIOR COLUMN DETAIL

SCALE: 1-1/2" = 1'-0" 2003_DTL-ARCH02

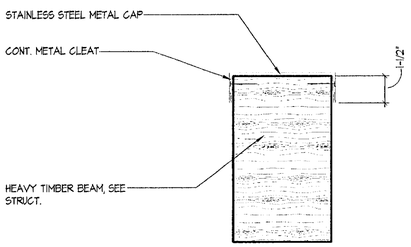

10 EXTERIOR BEAM DETAIL

SCALE: 3" = 1'-0" 2003_DTL-ARCH02

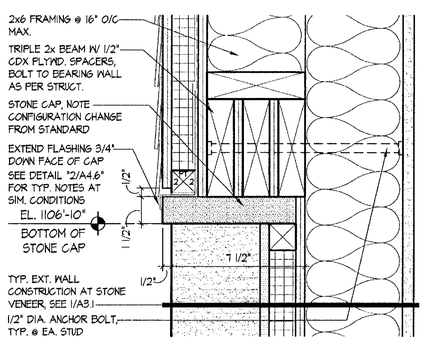

11 FLASHING DETAIL

SCALE: 3" = 1'-0" 2003_B501

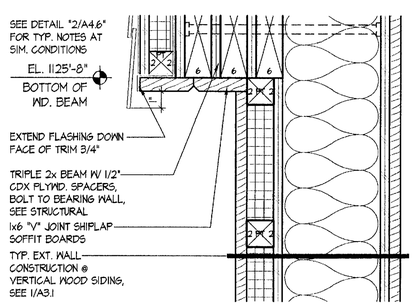

12 FLASHING DETAIL

SCALE: 3" = 1'-0" 2003_W501

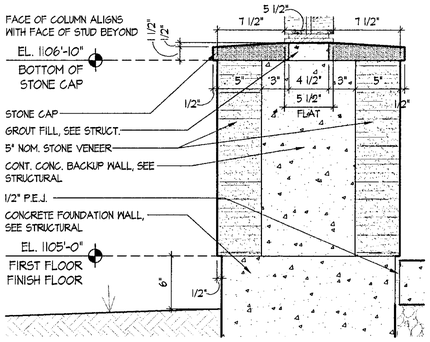

13 STONE WALL SECTION @ COLUMN

SCALE: 1-1/2" = 1'-0" 2003_DTL-ARCH02

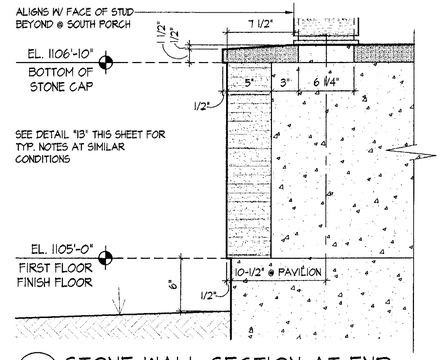

14 STONE WALL SECTION AT END

SCALE: 1-1/2" = 1'-0" 2003_DTL-ARCH02

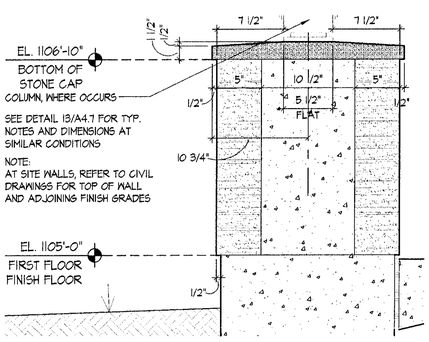

15 STONE WALL SECTION

SCALE: 1-1/2" = 1'-0" 2003_B501

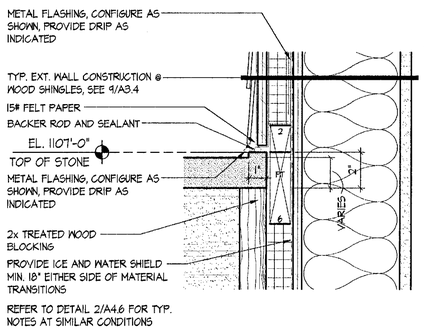

16 FLASHING DETAIL

SCALE: 3" = 1'-0" 2003_DTL-ARCH3

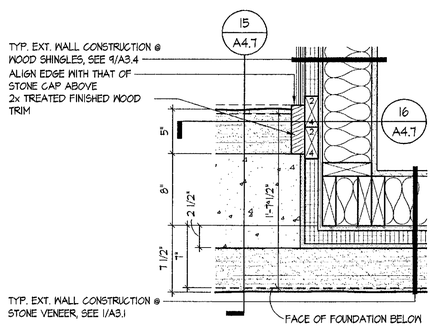

17 CORNER DTL. @ WOOD SHINGLES

SCALE: 1-1/2" = 1'-0" 2003_DTL-ARCH02

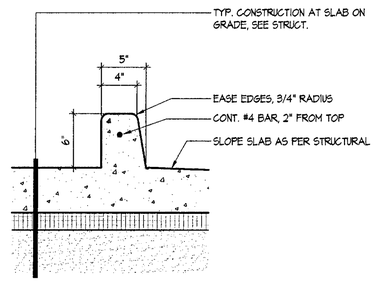

18 CURB AT MECHANICAL ROOM

SCALE: 1-1/2" = 1'-0" 2003_DTL-ARCH02

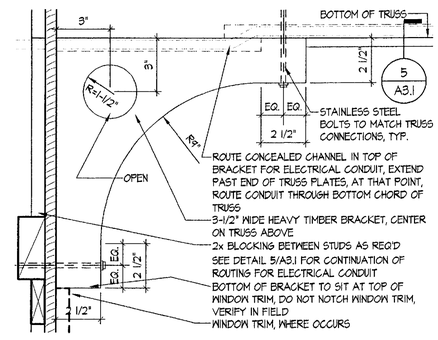

19 TRUSS BRACKET DETAIL

SCALE: 3" = 1'-0" 2003_B502

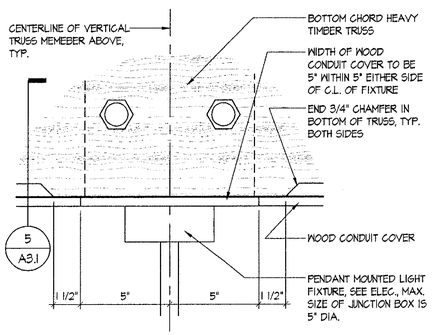

20 TRUSS DTL. @ LIGHT FIXTURE

SCALE: 3" = 1'-0" 2003_DTL-INT01

REGISTERED ARCHITECT ROBERT H. STARKEY JR. No. 1276 STATE OF VERMONT

NORTHERN ARCHITECTS
207 KING STREET
SUITE 3
BURLINGTON, VERMONT
05401-4502

802-658-1953

CONSULTANTS
CIVIL
KREBS AND LANSING
10 Main Street
Colchester VT 05446
(802)-878-0375
LANDSCAPE ARCHITECT
OHKW
OFFICE OF H. KEITH WAGNER
7 Marble Ave.
Burlington VT 05401
(802)-864-0010
STRUCTURAL
RICHARD M. DOHERTY, P.E.
117 St. Paul Street
Burlington VT 05401
(802)-660-4212
PLUMBING, MECHANICAL, AND ELECTRICAL
DUFRESNE AND HENRY
Precision Park
North Springfield VT 05150-0029
(802)-886-2261

REVISIONS

PROJECT

DERBY WELCOME CENTER
PROJECT #IM 091-3(8)

NEW FACILITY

DERBY
VERMONT

DATE:	01/07/2002
SCALE:	AS NOTED
CHECKED:	HS
PROJECT NO:	2003

ARCHITECTURAL DETAILS

A4.7

© NORTHERN ARCHITECTS INC., ALL RIGHTS RESERVED 2002