AS BUILTS
DATE: 2/21/99

GUARDRAIL DEFLECTION CHART

(PER AASHTO - ROADSIDE DESIGN GUIDE - 1988)

TYPE		GR POST SPACING	DEFLECTION
THREE CABLE	W/STEEL POSTS	16' - 0"	12'
	W/WOODEN POSTS	12' - 6"	12'
W-BEAM	W/WEAK POST	12' - 6"	7'
	W/STRONG POST	6' - 3"	3'
BOX BEAM		6' - 0"	5'
THRIE BEAM	W/WEAK POST	12' - 6"	4'
	W/STRONG POST	6' - 3"	2'

THIS CHART LISTS THE THEORETICAL DEFLECTION DISTANCE UPON IMPACT OF VARIOUS GUARDRAIL WITH DIFFERENT TYPES AND SPACING OF POSTS.

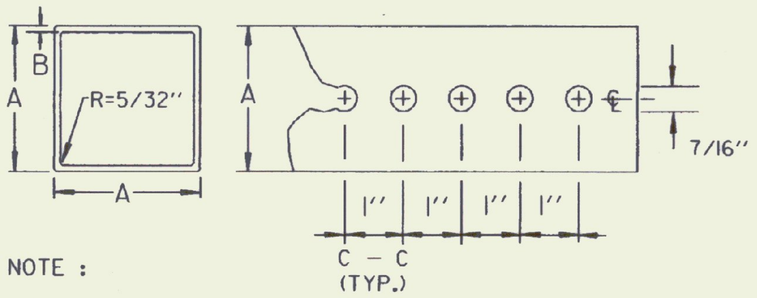

NOTE :

THE POSTS SHALL BE CAREFULLY FORMED OF STEEL WITH A MINIMUM YIELD OF 55,000 PSI, INTO A SIZE AND SHAPE WITH CORNERS INDUCTION WELDED IN SUCH A MANNER THAT NEITHER FLASH NOR WELD SHALL INTERFERE WITH THE TELESCOPING PROPERTIES, NOR DAMAGE THE GALVANIZING.

- THE WALL THICKNESS TOLERANCES SHALL BE +.005 AND -.010 FOR THE 12 GAUGE.
  THE WALL THICKNESS TOLERANCES SHALL BE +.002" AND -.008" FOR THE 14 GAGE.

DIMENSION DETAILS AND POST SELECTION CHART

POST SELECTION CHART

SIGN AREA (FT^2) X H (FT) ≤ SV (SELECTION VALUE)

POST SIZE	DIMENSIONS			SECTION MODULUS IN^3	ONE POST Sv	TWO POST Sv	THREE POST Sv	NUMBER PERMITTED IN 8' PATH
LBS/FT.	A	*B	GAUGE					
2.30	1-3/4"	.083	14	0.231	74	148	222	TWO
2.65	2"	.083	14	0.296	95	190	286	TWO
3.35	2-1/2"	.105	12	0.642	206	412	616	ONE

DESIGN CRITERIA:

WIND SPEED = 60 MPH (10 -YEAR MEAN RECURRENCE INTERVAL)
WIND PRESSURE = 13 PSF
STEEL MINIMUM YIELD = 55,000 PSI
ALLOWABLE STRESS = (1.4) 0.60 FY

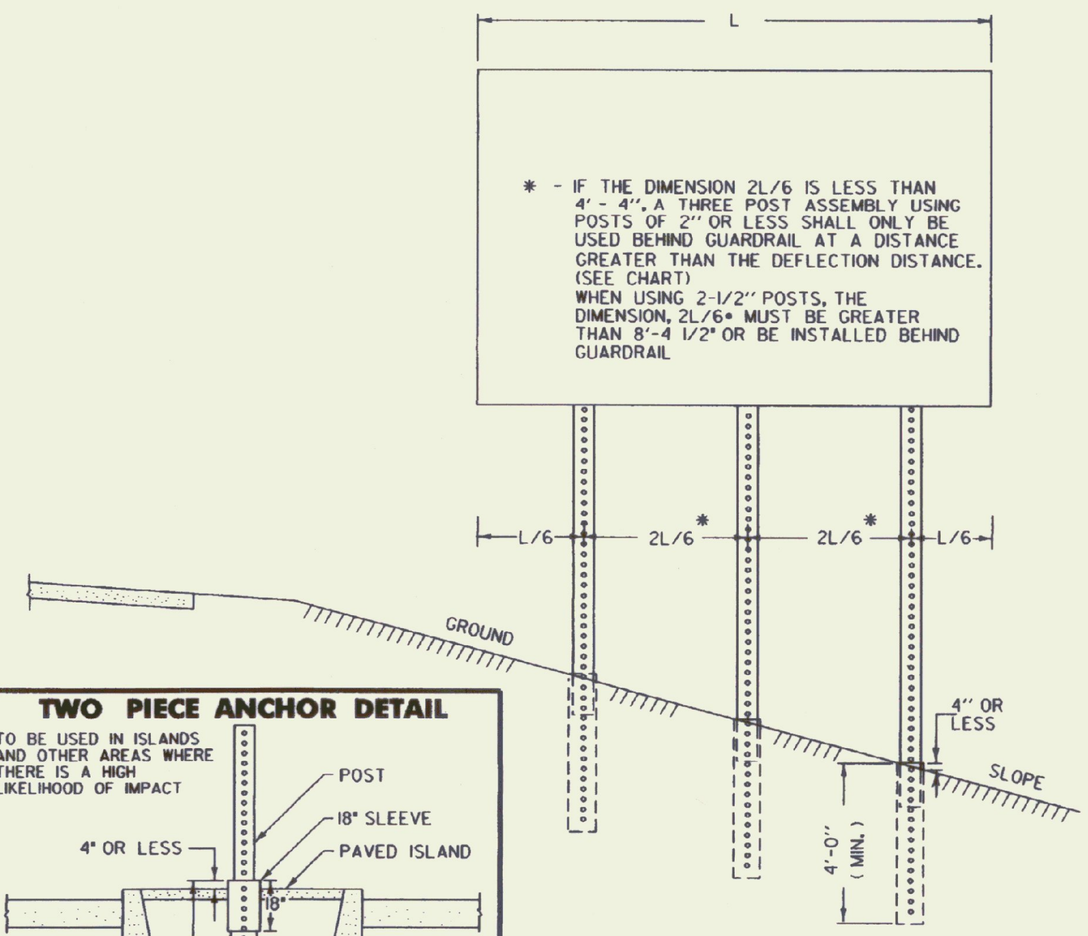

MULTI-POST INSTALLATIONS

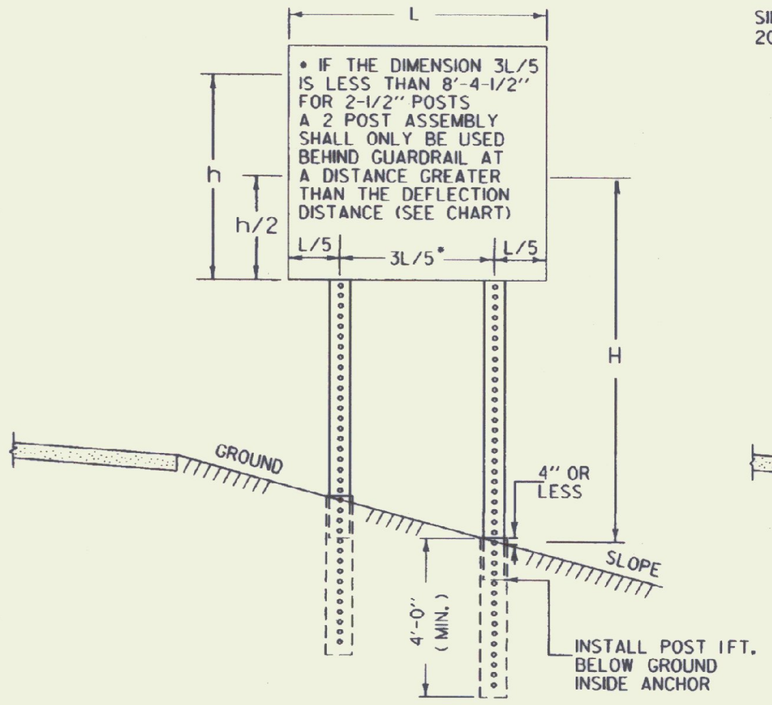

POST SPACING DETAILS

GENERAL NOTES

CONSTRUCTION METHODS - POSTS MAY BE DRIVEN OR SET IN A DUG HOLE AND BACKFILLED. IF DRIVEN, A DRIVING CAP SHALL BE USED. THE DUG HOLE INSTALLATION SHALL BE USED IN AREAS OF POOR SOIL CONDITIONS OR AS DIRECTED BY THE RESIDENT ENGINEER. BACKFILL SHALL BE COMPACTED AS DIRECTED BY THE RESIDENT ENGINEER.

SIGN CLEARANCES - HORIZONTAL AND VERTICAL SIGN CLEARANCES SHALL BE SHOWN ON THE PLANS OR THE APPROPRIATE STD. SHEETS.

SINGLE POST INSTALLATIONS SHALL BE LIMITED TO A SIGN AREA OF 20 SQ. FT. OR LESS

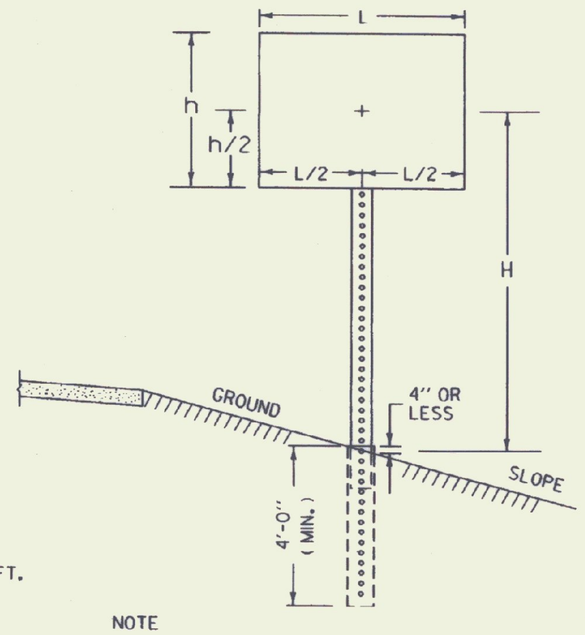

NOTE

WHEN USING SQUARE STEEL POSTS ON STEEP SLOPES (1ON 2 OR STEEPER) ADD ONE FOOT EMBEDMENT FOR GREATER STABILITY.

TWO PIECE ANCHOR DETAIL

TO BE USED IN ISLANDS AND OTHER AREAS WHERE THERE IS A HIGH LIKELIHOOD OF IMPACT

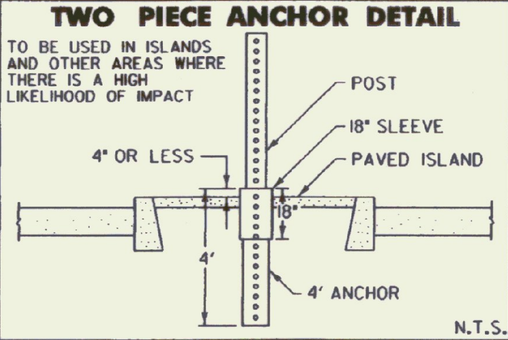

N.T.S.

TOP VIEW OF ANCHOR, POST AND BOLT

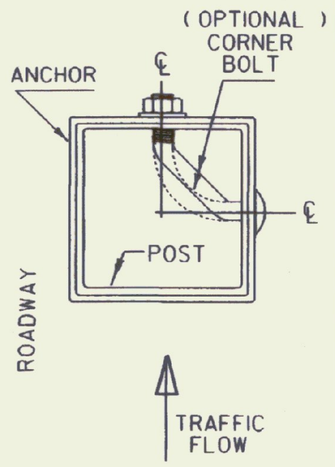

OPTIONAL CORNER BOLT DETAILS

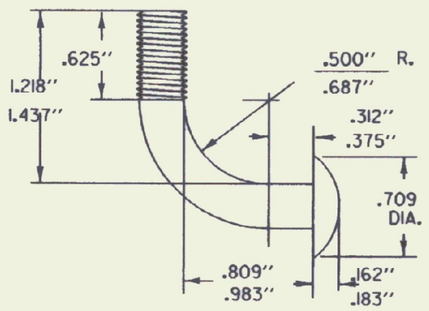

FOR 1-3/4" TO 2-1/2" SQ. TUBE BOLT SIZE VARIES WITH POST SIZE

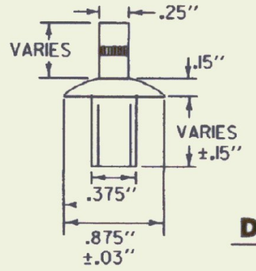

THIS DRIVE RIVET MAY BE SUBSTITUTED FOR EITHER OF THE CORNER BOLTS SHOWN ABOVE OR TO THE RIGHT.

DRIVE RIVET

DOUBLE DIMENSIONS REFER TO TWO ALTERNATE BOLT SIZES.

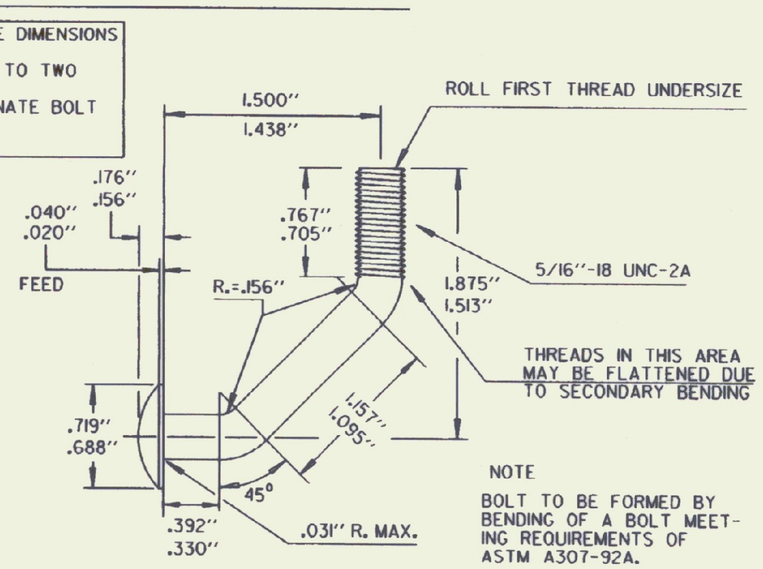

NOTE

BOLT TO BE FORMED BY BENDING OF A BOLT MEETING REQUIREMENTS OF ASTM A307-92A.

- DIMENSIONS VARY AS NEEDED FOR POST SIZE USED

CONNECTION DETAIL

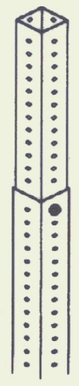

POST IS TO BE INSERTED INTO ANCHOR ONE FOOT BELOW GROUND LEVEL. ANCHOR IS TO BE 4'-0" MINIMUM LENGTH WITH NO MORE THAN 4" ABOVE GROUND. ANCHOR IS ONE SIZE (1/4") GREATER THAN THE POST AND ALL ANCHORS ARE TO BE 12 GAGE EXCEPT ANCHORS FOR 2-1/2" POSTS ARE TO BE 7 GAGE. CONNECTION IS TO BE MADE USING THE BOLT PROVIDED WITH THE SIGN SYSTEM (SEE DETAILS LEFT), AT THE TOP HOLE IN THE ANCHOR (APPROXIMATELY 3-1/2" ABOVE GROUND). THREE INCH ANCHORS WHICH DO NOT HAVE HOLES ON 1" CENTERS WILL REQUIRE DRILLING OF 7/16" HOLES FOR CONNECTIONS.

(SEE DETAIL LEFT FOR BOLT PLACEMENT)

OTHER STDS. REQUIRED: E-120, E-160

REVISIONS AND CORRECTIONS

APR. 27, 1994 - DATE OF ORIGINAL ISSUE
JUL. 21, 1994 - REVISED POST GAUGES
AUG. 18, 1995 - ADDED TWO PIECE ANCHOR DETAIL

APPROVED FOR THIS PROJECT AND/OR DESIGN IMPLEMENTATION. FHWA FINAL APPROVAL PENDING.

APPROVED

DIRECTOR OF ENGINEERING

TRAFFIC AND SAFETY ENGINEER

PRELIMINARY

SQUARE STEEL SIGN POST

/traf/std/stdel64.dgn/stdel64.1

VERMONT AGENCY OF TRANSPORTATION

STANDARD

E-164