AS BUILTS
DATE: 7/21/99

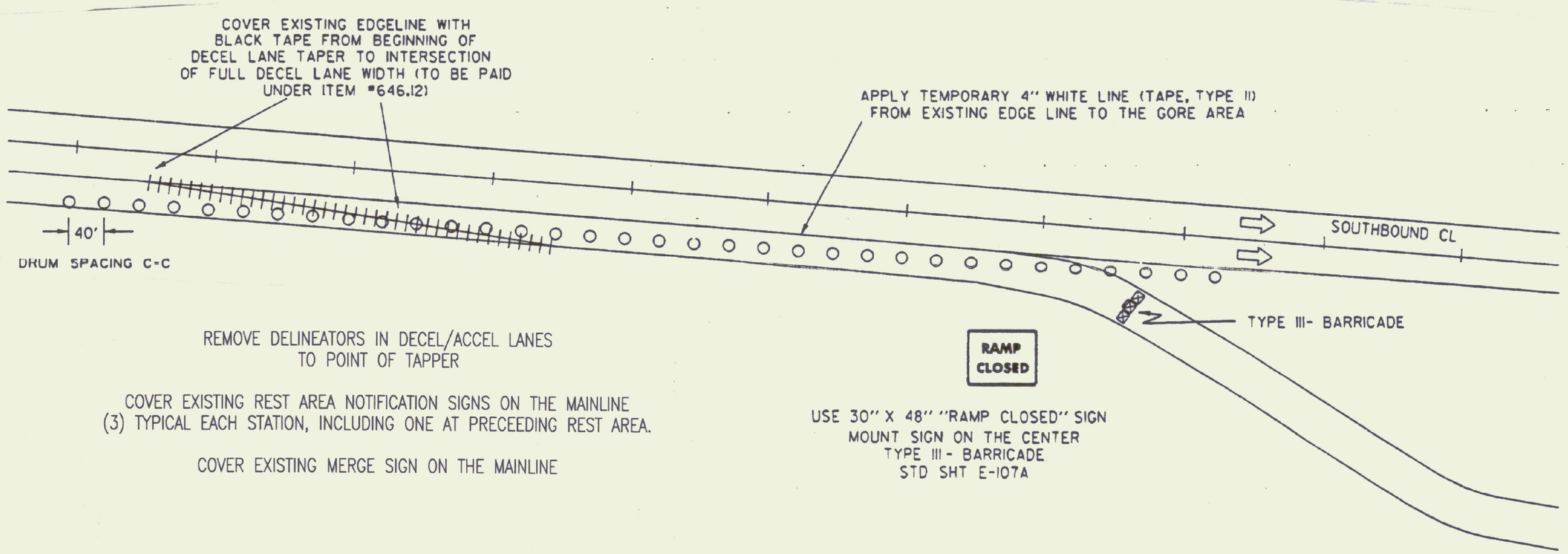

REMOVE DELINEATORS IN DECEL/ACCEL LANES TO POINT OF TAPPER

COVER EXISTING REST AREA NOTIFICATION SIGNS ON THE MAINLINE (3) TYPICAL EACH STATION, INCLUDING ONE AT PRECEEDING REST AREA.

COVER EXISTING MERGE SIGN ON THE MAINLINE

USE 30" X 48" "RAMP CLOSED" SIGN
MOUNT SIGN ON THE CENTER
TYPE III- BARRICADE
STD SHT E-107A

NTS

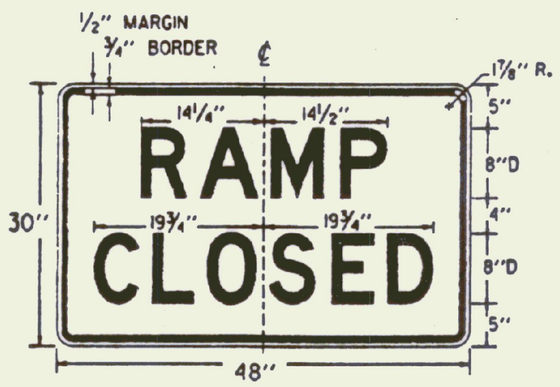

COLORS:
BLACK TEXT AND BORDER
WHITE REFLECTORIZED BACKGROUND

SEE STANDARD SHEET E-100 FOR NOTES AND TEXT DETAILS

SIGN DETAILS INDICATE THE APPROPRIATE COLOR.

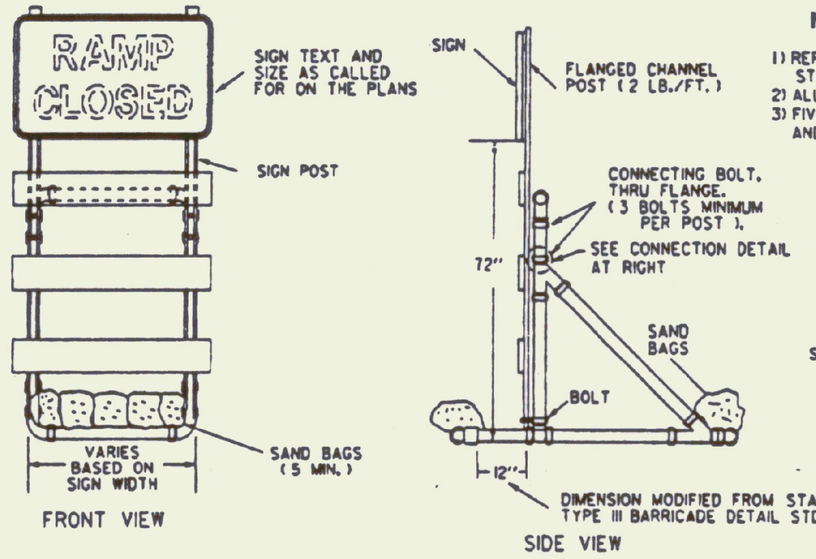

SIGN MOUNTING ON TYPE III BARRICADE

NOTES:

1) REFER TO STANDARD TYPE III BARRICADE STD SHT E-107A
2) ALL BARRICADE JOINTS SHALL BE GLUED.
3) FIVE SAND BAGS ARE REQUIRED BOTH FRONT AND BACK, 50 LB. MINIMUM EACH.

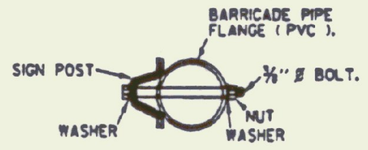

CONNECTION DETAIL

LEGEND

- ○ - CHANNELIZING DRUM
- ⊠ - TYPE III BARRICADES
- ⇧ - INDICATES TRAFFIC DIRECTION
- ++++ - REMOVAL OF EXISTING PAVEMENT MARKINGS

STATE OF VERMONT
DEPARTMENT OF BUILDINGS AND GENERAL SERVICES
AGENCY OF ADMINISTRATION
MONTPELIER, VERMONT

GEORGIA INTERSTATE 89 REST AREAS
NORTHBOUND AND SOUTHBOUND

DATE:	SCALE:	REVISIONS:	DRAWING NAME:
AUGUST 21, 1998	N.T.S.		TEMPORARY RAMP CLOSURE
DRAWN BY:	PROJECT NO.		DRAWING NO:
CHECKED BY:	IM 089-3 (30)		TRC-1

SHEET _____ OF _____

G:\PROJECTS\ADA\GEORG-NS\RAMPCLOS Tue Aug 18 11:02:25 1998 Plotter By: Michael S. Simanskas