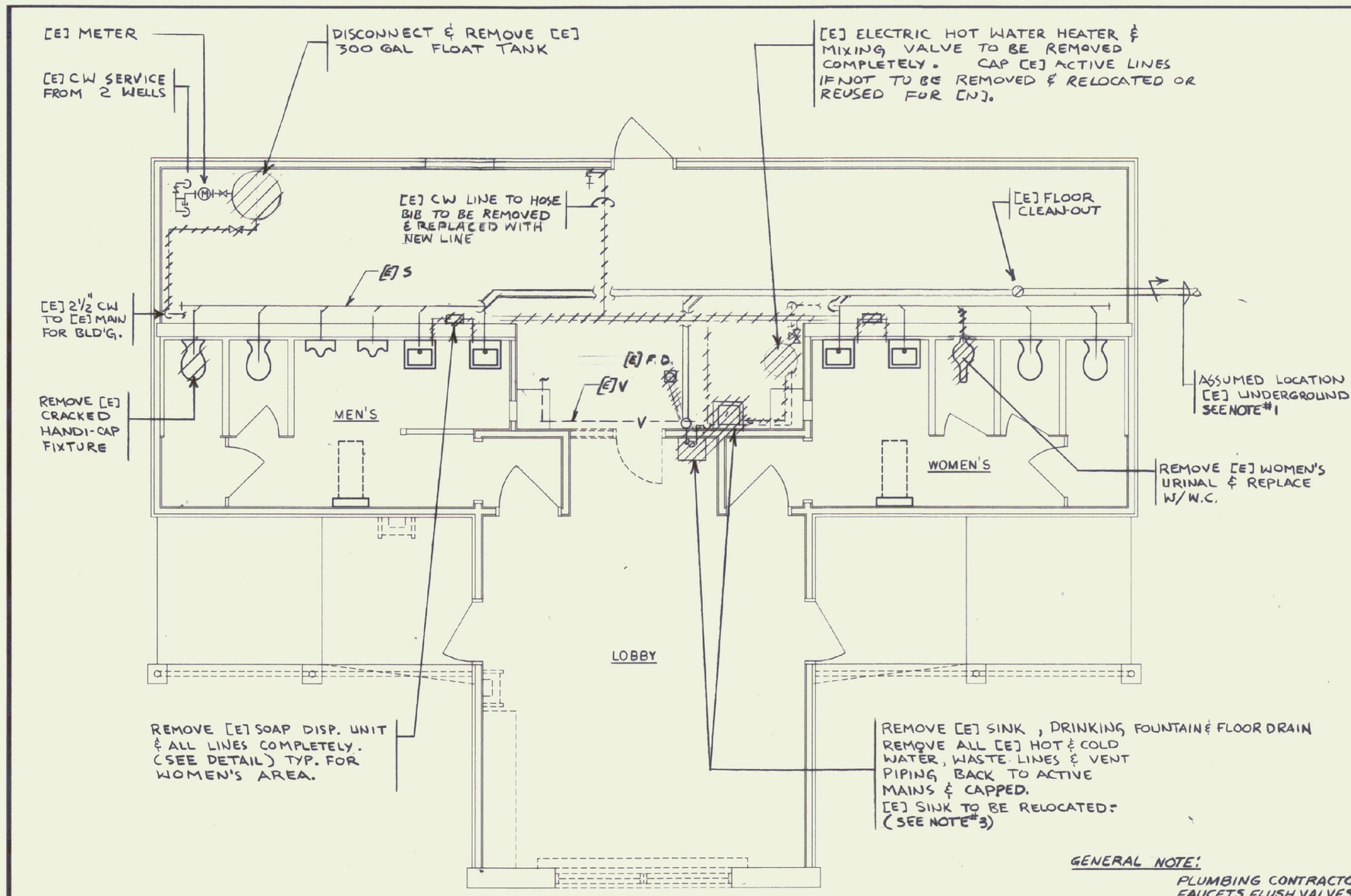

PLUMBING-EXISTING FLOOR PLAN-DEMOLITION

SCALE: 1/4"=1'-0"

GENERAL NOTE:

PLUMBING CONTRACTOR TO REMOVE ALL EXISTING FAUCETS, FLUSH VALVES ETC. WHICH ARE NOT TO BE REPLACED WITH NEW & REPLACE ALL WASHERS WITH NEW.

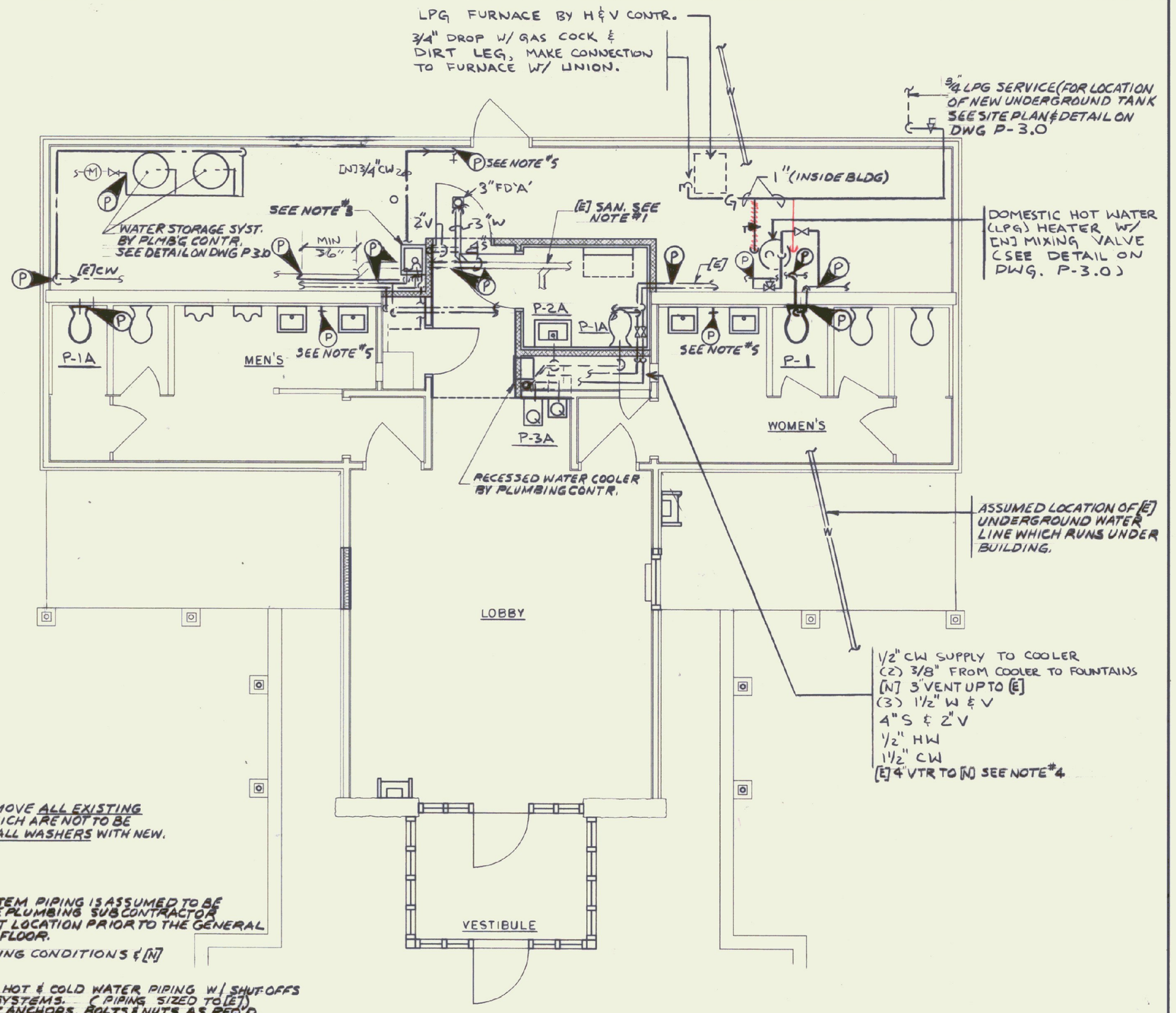

PLUMBING-FOOR PLAN-RENOVATIONS

SCALE: 1/4"=1'-0"

NOTES:

1. THE UNDERFLOOR SANITARY SYSTEM PIPING IS ASSUMED TO BE APPROX. CORRECT. HOWEVER, THE PLUMBING SUBCONTRACTOR SHALL FIELD VERIFY ITS EXACT LOCATION PRIOR TO THE GENERAL CONTRACTOR BREAKING UP THE FLOOR.
2. COORDINATE ALL WORK W/ EXISTING CONDITIONS & [N] WORK BY OTHER TRADES.
3. RELOCATE [E] SINK W/ ALL [N] HOT & COLD WATER PIPING W/ SHUT-OFFS VENT, WASTE W/ TRAP PIPING SYSTEMS. (PIPING SIZED TO [E]). FURNISH & INSTALL [N] SUPPORT ANCHORS, BOLTS & NUTS AS REQ'D. CONNECT PIPING SYSTEMS TO NEAREST ACTIVE LINES (SYSTEMS) IN AREA.
4. EXTEND [E] 4" VENT UP THRU NEW ROOF STRUCTURE & OFF SET AS REQ'D TO AVOID [N] ROOF VALLEY. THIS CONTRACTOR TO FURNISH NEW 10 GA COPPER ROOF SLEEVE TO ROOFING SUB-CONTR.
5. FURNISH & INSTALL [N] VACUUM BREAKERS ON [E] HOSE BIBBS (TYP. 3)
6. SEE DWG P-3.0 FOR LEGEND, FIXTURE SCHEDULE & DETAILS

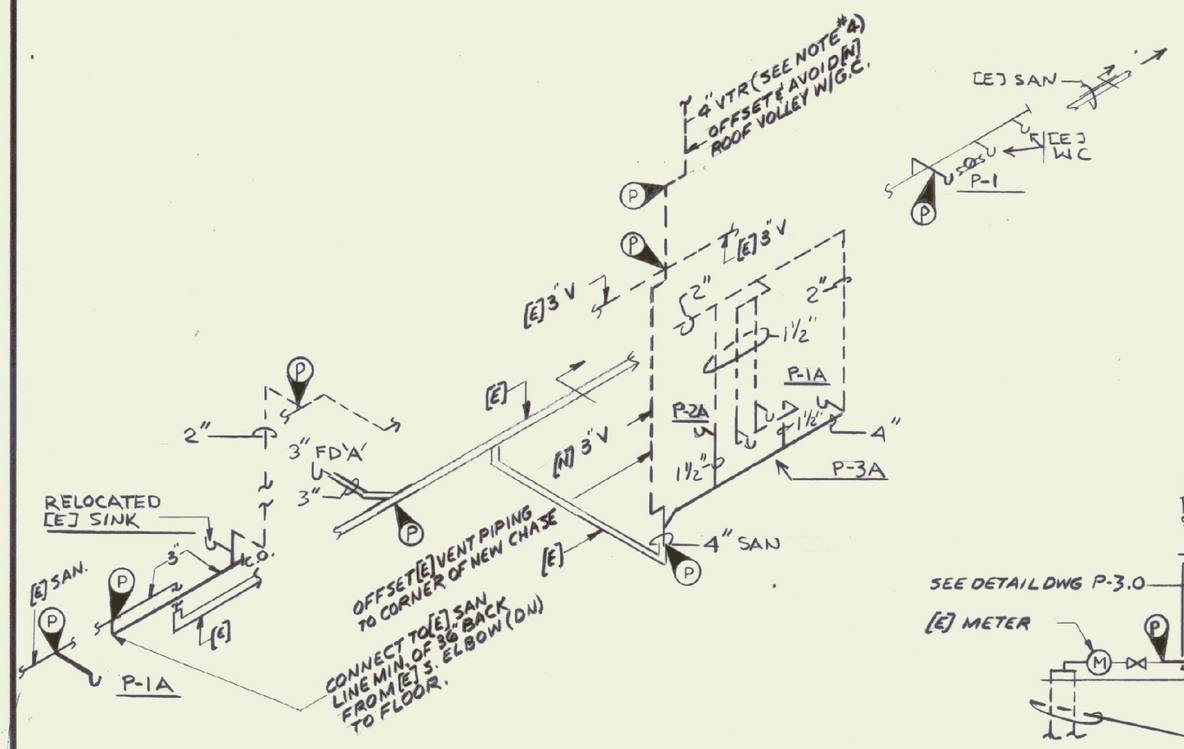

SANITARY & VENT ISOMETRIC DIAGRAM RENOVATIONS

NOT TO SCALE

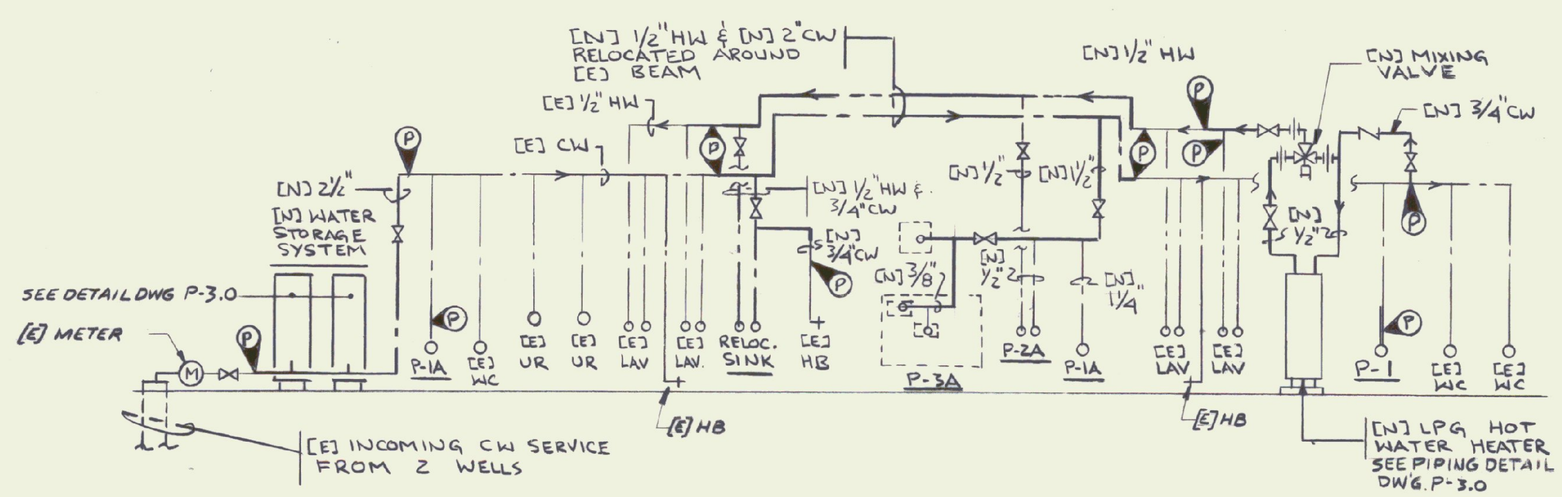

HOT & COLD WATER RISER DIAGRAM RENOVATIONS

NOT TO SCALE

RECORD DRAWING

STATE OF VERMONT
DEPARTMENT OF STATE BUILDINGS
AGENCY OF ADMINISTRATION
MONTPELIER, VERMONT

REST AREA REHABILITATION
GEORGIA I-89 NORTHBOUND

DATE: 8-21-98	SCALE: 1/4"=1'-0"	REVISIONS:	DRAWING NAME: PLUMBING PLANS
DRAWN BY: DG	PROJECT NO. 97-368		DRAWING NO: P-1.0
CHECKED BY: NFL 779A			

SHEET ____ OF ____

G:\PROJECTS\ADA\GEORGIA\H-P-PLAN Tue Feb 10 15:39:17 1998 Plotted by: Michael S. Simanskas