AS BUILTS
DATE: 7/21/99

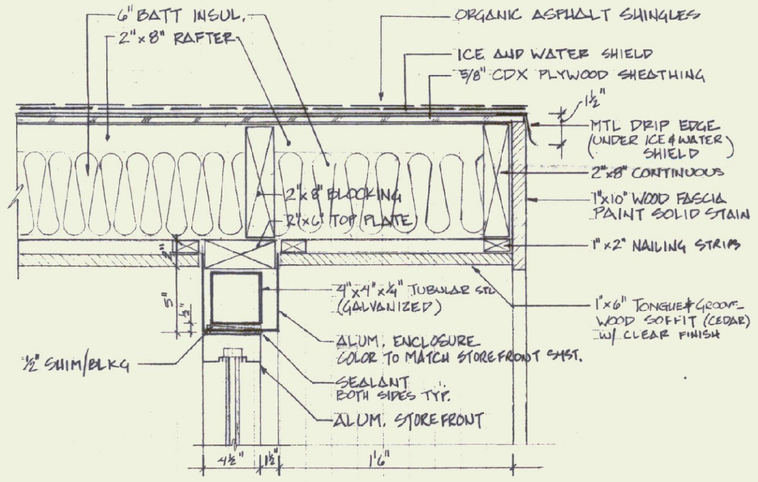

01 / 3.5 CONNECTION - STOREFRONT/ROOF VESTIBULE — 1 1/2"=1'-0"

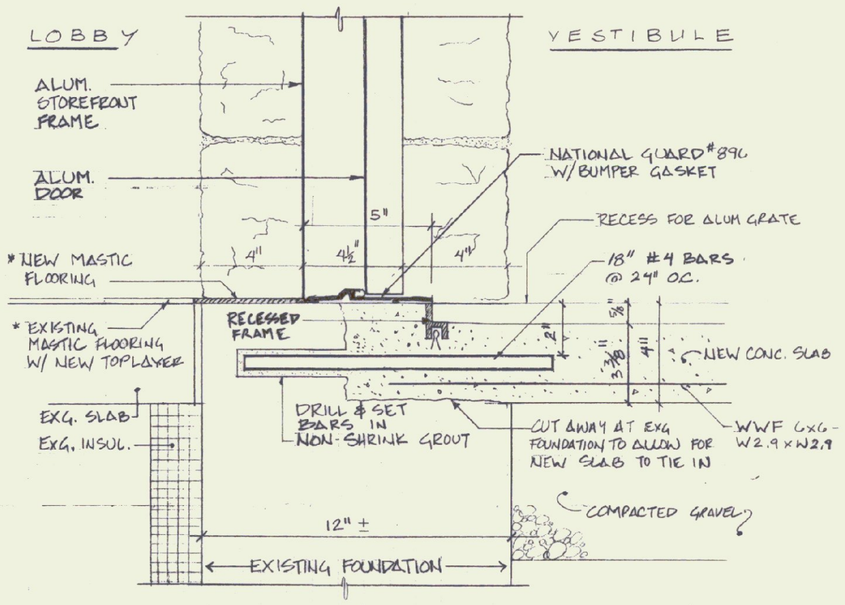

* NEW AND EXISTING MASTIC FLOORING SHALL BE AT THE SAME LEVEL AND SHALL APPEAR AS ONE CONTINUOUS FLOORING MATERIAL

05 / 3.5 2ND ENTRY THRESHOLD VESTIBULE DOOR #202 — 3"=1'-0"

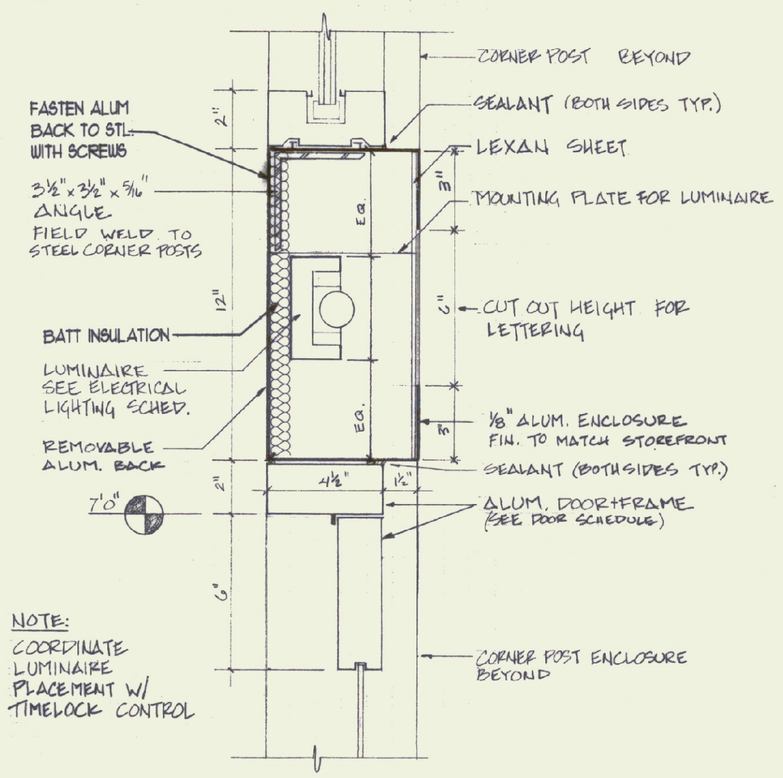

NOTE:
COORDINATE LUMINAIRE PLACEMENT W/ TIMELOCK CONTROL

02 / 3.5 ENTRY - BACKLIT SIGN & DOOR HEAD VESTIBULE — 3"=1'-0"

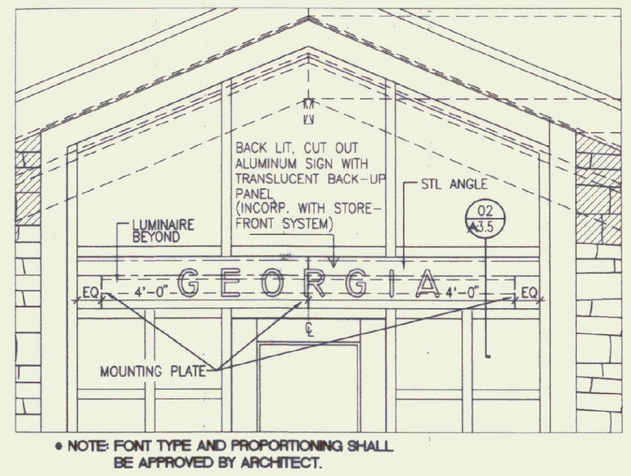

* NOTE: FONT TYPE AND PROPORTIONING SHALL BE APPROVED BY ARCHITECT.

02A / 3.5 SIGN ELEVATION — 1-1/2" = 1'

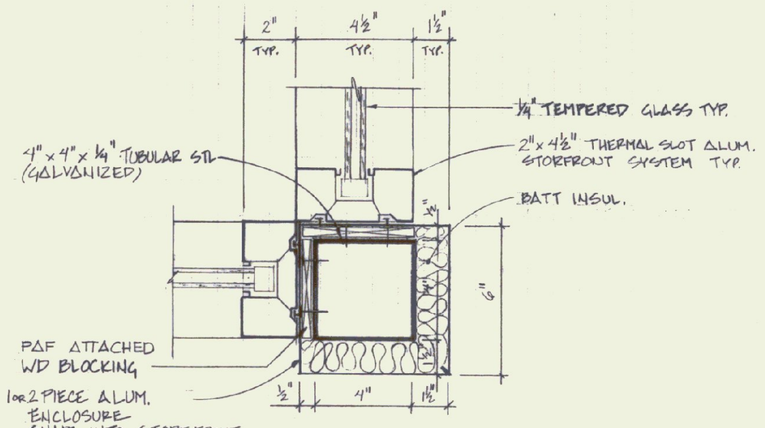

06 / 3.5 CORNER ENCLOSURE VESTIBULE — 3"=1'-0"

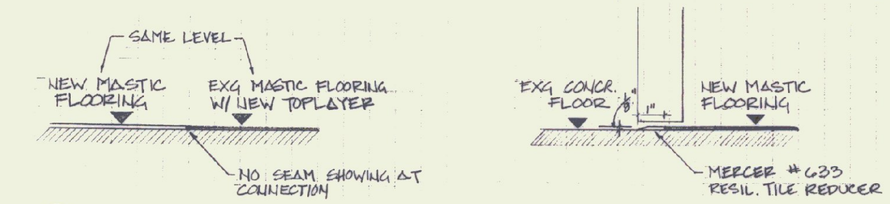

11 / 3.5 CONNECTION - NEW / EXG FLOORING — NO SCALE

12 / 3.5 TRANSITION - THRESHOLD UTILITY DOOR #207 — NO SCALE

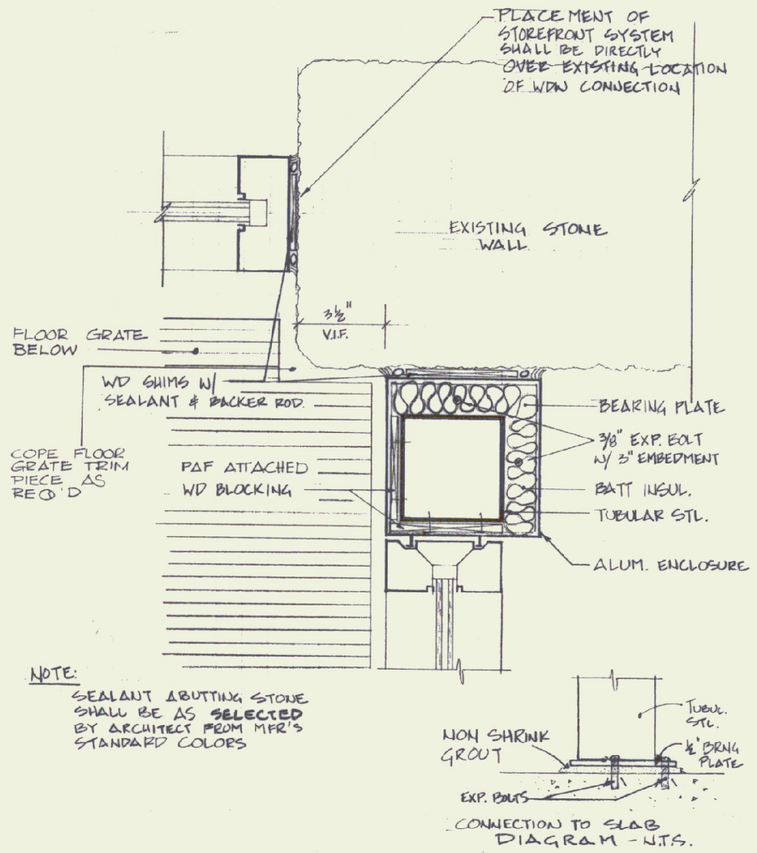

NOTE:
SEALANT ABUTTING STONE SHALL BE AS SELECTED BY ARCHITECT FROM MFR'S STANDARD COLORS

07 / 3.5 CONNECTION - STOREFRONT & EXISTING STONE WALL VESTIBULE — 3"=1'-0"

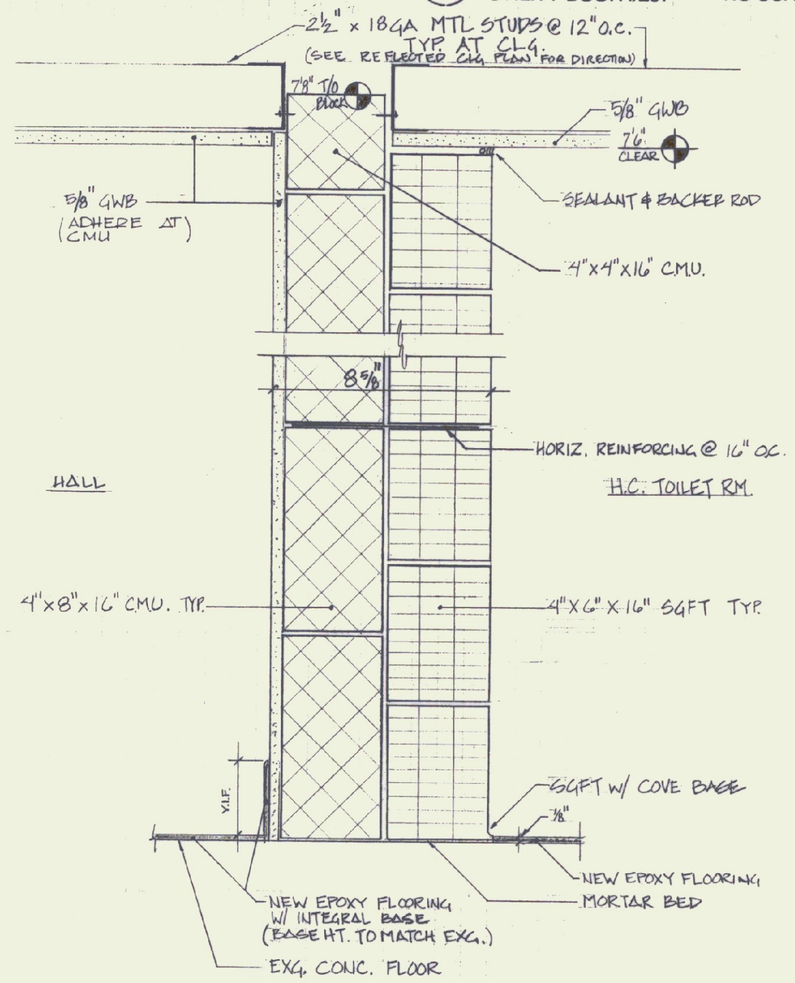

10 / 3.5 SECTION THROUGH WALL UNISEX TLT — 3"=1'-0"

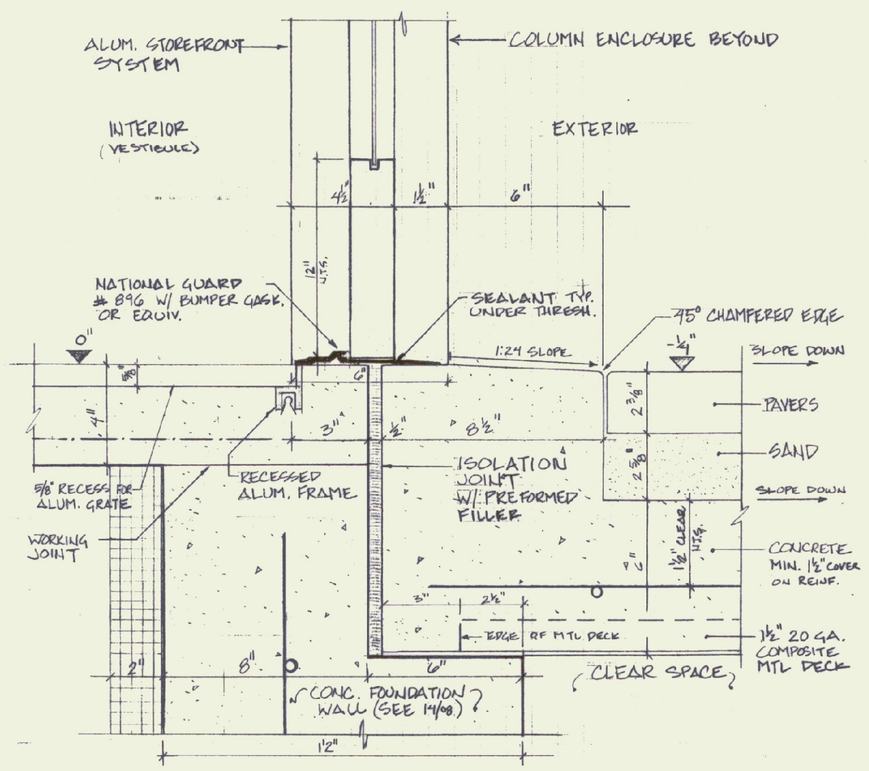

03 / 3.5 ENTRY - THRESHOLD SECTION VESTIBULE DOOR #201 — 3"=1'-0"

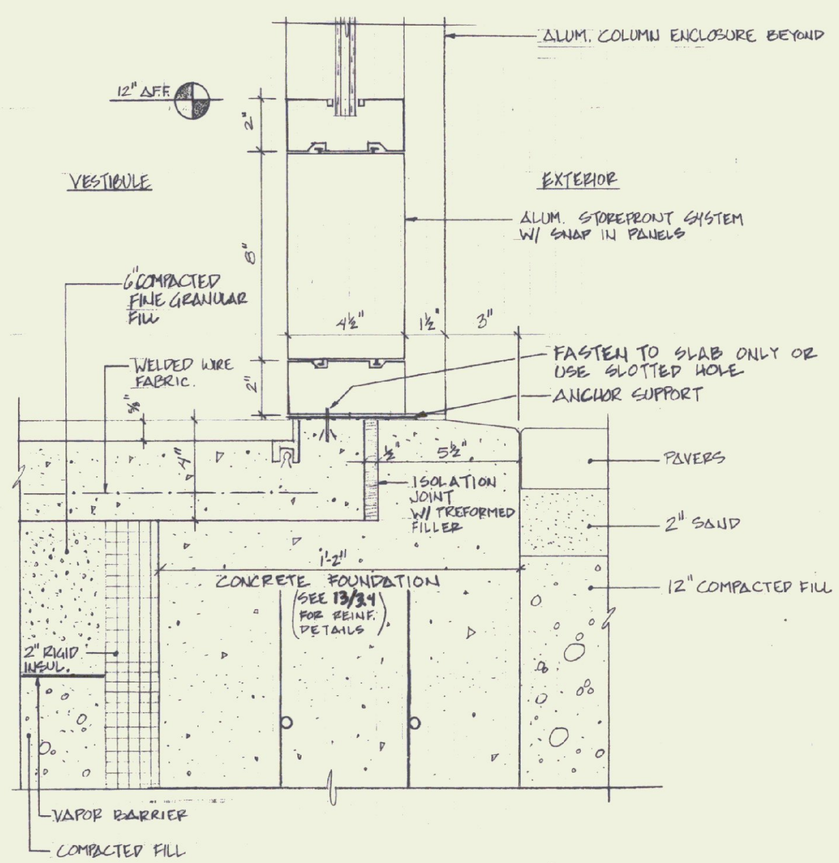

04 / 3.5 EXTERIOR STOREFRONT SILL VESTIBULE — 3"=1'-0"

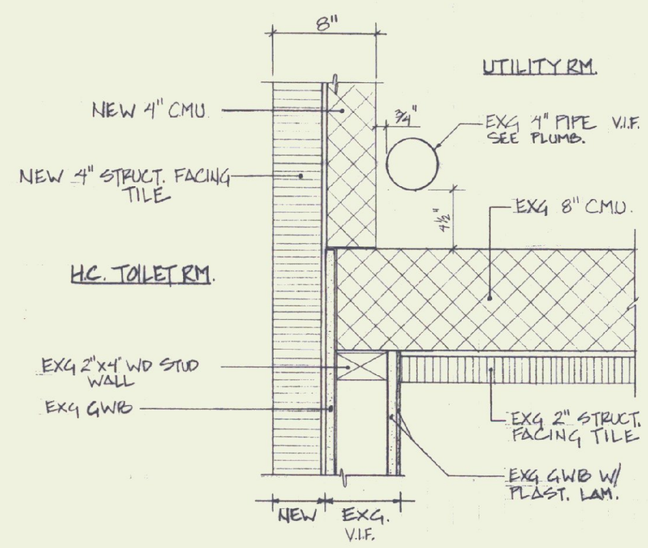

08 / 3.5 CONNECTION - WOMENS RESTRM / UTIL. RM / UNISEX RESTRM — 1 1/2"=1'-0"

STATE OF VERMONT
DEPARTMENT OF BUILDINGS AND GENERAL SERVICES
AGENCY OF ADMINISTRATION
MONTPELIER, VERMONT

GEORGIA INTERSTATE 89 REST AREAS
NORTHBOUND AND SOUTHBOUND

DATE: AUGUST 21, 1998	SCALE: AS NOTED	REVISIONS:	DRAWING NAME: MISCELLANEOUS DETAILS
DRAWN BY: MSS	PROJECT NO. IM 089-3 (30)		DRAWING NO: A-3.5
CHECKED BY: JBA			

SHEET ____ OF ____

G:\PROJECTS\ADA\GEORG-NS\A35 Wed Jul 22 15:10:54 1998 Plotter By: Michael S. Silmanskas