AS BUILTS
DATE: 7/21/99

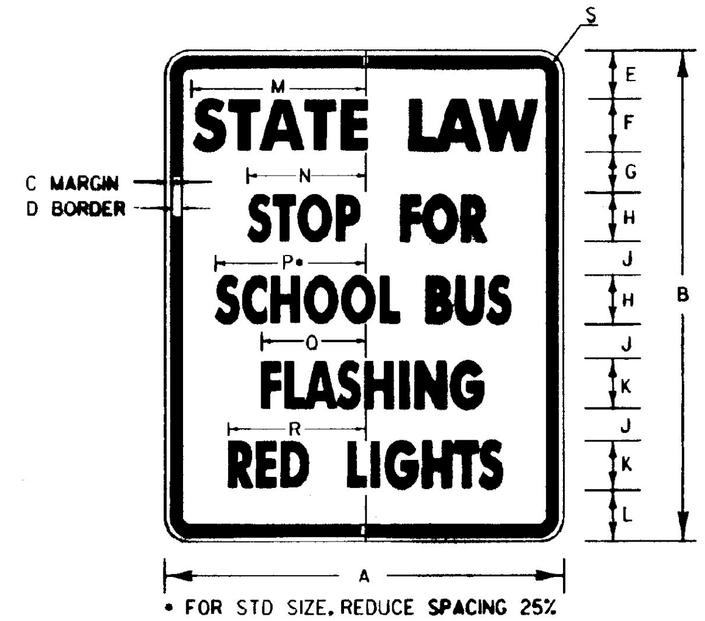

• FOR STD SIZE, REDUCE SPACING 25%

VR-048

SIGN	DIMENSIONS (INCHES)																
	A	B	C	D	E	F	G	H	J	K	L	M	N	P	R	S	T
STD.	24	30	3/8	5/8	3	4B	3	3B	1 1/2	3B	2 1/2	9 1/2	10 5/8	10 7/16	6 5/16	8 5/16	1 1/2
EXPWY. & FWY.	48	60	3/4	1 1/4	6	7C	5	6B	4	6B	6	21	14 1/4	18 1/16	12 5/16	16 5/16	3

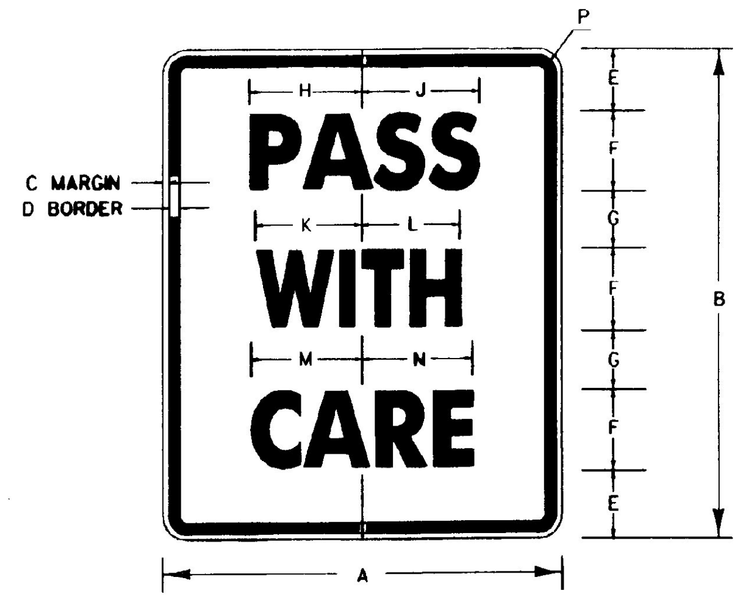

R4-2

SIGN	DIMENSIONS (INCHES)												
	A	B	C	D	E	F	G	H	J	K	L	M	N	P
MIN.	18	24	3/8	5/8	3 1/2	4C	2 1/2	5 7/16	5 5/8	5	4 3/4	5 3/8	5 1/2	1 1/2
STD.	24	30	3/8	5/8	3 1/2	6C	2 1/2	8 3/16	8 7/16	7 1/2	7 3/16	8	8 1/4	1 1/2
EXPWY.	36	48	5/8	7/8	7	8C	5	10 7/8	11 1/4	10	9 1/2	10 11/16	11	2 1/4
FWY.	48	60	3/4	1 1/4	8	10C	7	13 5/8	14 1/16	12 1/2	11 5/8	13 3/8	13 3/4	3

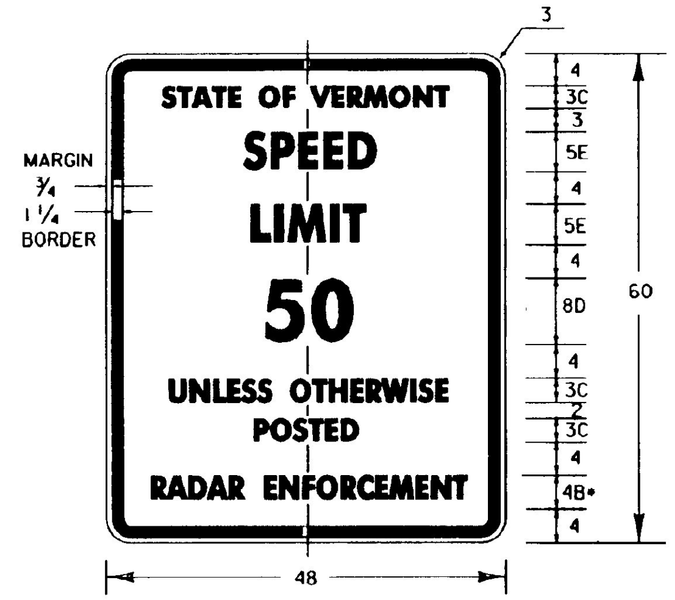

• REDUCE SPACING 25%

VR-114

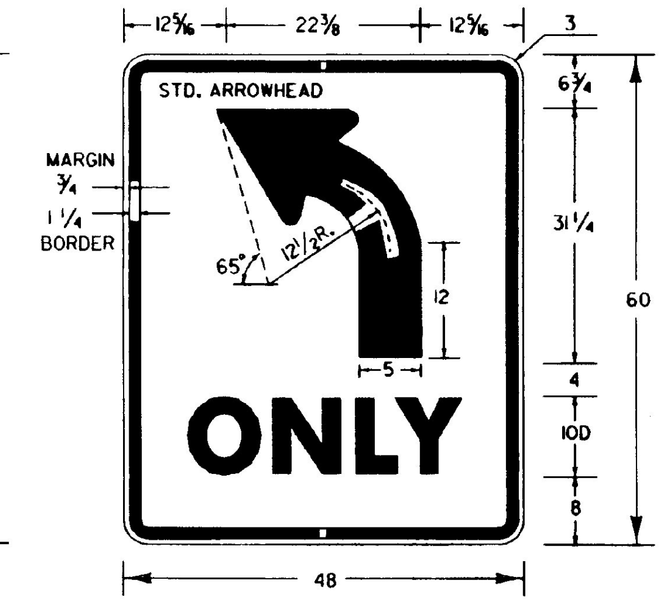

(OVERHEAD SIGN)

R3-5

ARROW HEAD DETAIL

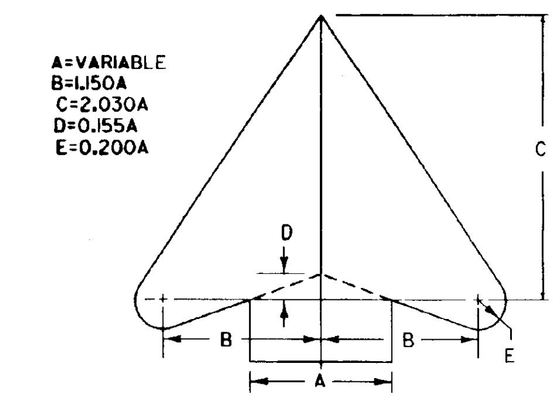

DIMENSIONS (INCHES)				
A	B	C	D	E
2	2 5/16	4 1/16	5/16	3/8
2 1/4	2 5/8	4 1/2	3/8	7/16
2 1/2	2 7/8	5 1/16	3/8	1/2
2 5/8	3	5 1/4	3/8	1/2
2 3/4	3 3/16	5 3/16	7/16	9/16
3	3 1/2	6 1/8	7/16	9/16
3 1/8	3 5/8	6 3/8	1/2	5/8
3 1/4	3 3/4	6 5/8	1/2	5/8
3 3/16	3 13/16	6 11/16	1/2	11/16
3 1/2	4	7 1/8	9/16	11/16
3 3/4	4 3/16	7 5/8	9/16	3/4
4	4 5/8	8 1/8	5/8	13/16
4 1/16	4 3/4	8 1/4	5/8	13/16

DIMENSIONS (INCHES)				
A	B	C	D	E
4 1/4	4 7/8	8 5/8	5/8	13/16
4 3/8	5	8 7/8	11/16	7/8
4 1/2	5 3/16	9 1/8	11/16	7/8
4 3/4	5 7/16	9 5/8	3/4	1
4 7/8	5 5/8	9 7/8	3/4	1
5	5 3/4	10 1/8	3/4	1
5 1/4	6	10 5/8	13/16	1 1/16
5 1/2	6 3/8	11 1/8	7/8	1 1/8
5 3/4	6 5/8	11 11/16	7/8	1 1/8
6	6 7/8	12 3/16	15/16	1 3/16
6 1/2	7 1/2	13 3/16	1	1 5/16
7	8	14 3/16	1 1/16	1 3/8
7 1/2	8 5/8	15 3/16	1 1/8	1 1/2
8	9 3/16	16 1/4	1 1/4	1 5/8

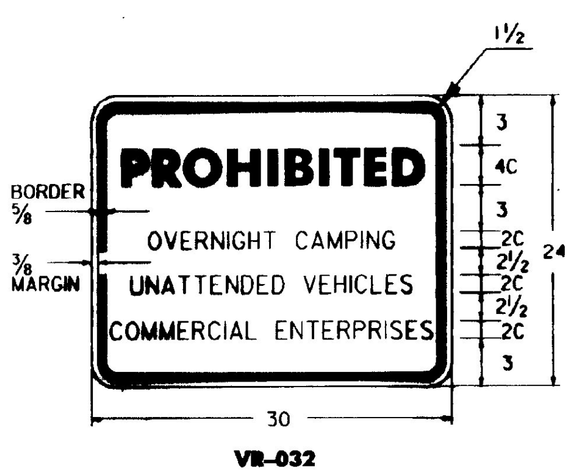

VR-032

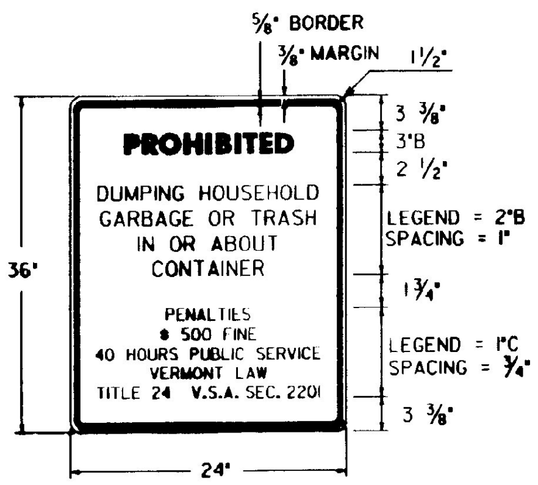

VR-278

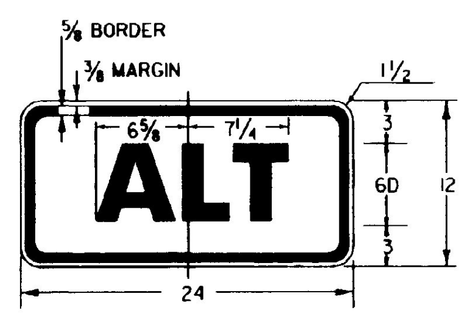

M4-1A

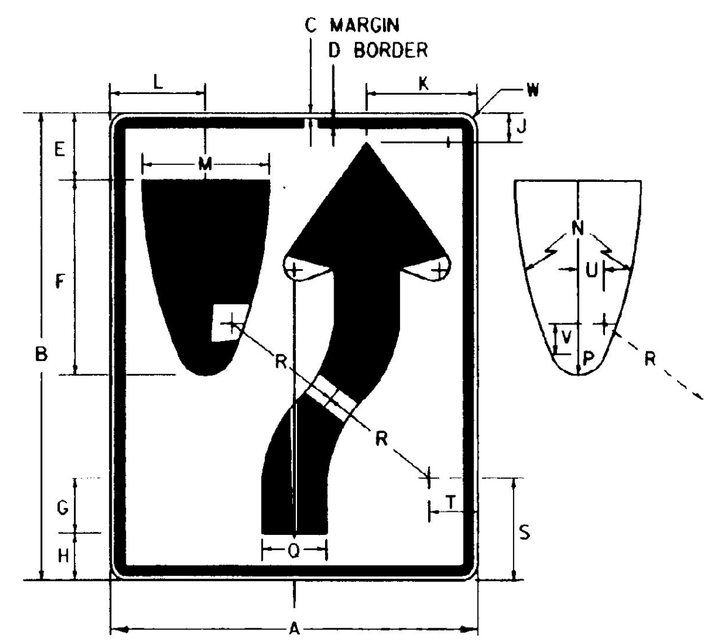

R4-7

SIGN	DIMENSIONS (INCHES)									
	A	B	C	D	E	F	G	H	J	K
MIN	18	24	3/8	5/8	3 3/8	9 3/8	1 7/8	2 1/4	1 3/8	5 1/2
STD	24	30	3/8	5/8	4 1/2	12 1/2	2 1/2	3	1 7/8	7 3/8
EXPWY	36	48	5/8	7/8	6 3/4	18 3/4	3 3/4	4 1/2	2 13/16	11 1/8
FWY	48	60	3/4	1 1/4	9	25	5	6	3 3/4	14 13/16
	L	M	N	P	Q	R	S	T	U	V	W
MIN	4 11/16	6	22 1/2	1 1/2	3	6 3/4	4 1/8	2 1/4	11/16	7/16	1 1/2
STD	6 1/4	8	30	2	4	9	5 1/2	3	1 3/8	2 13/16	1 1/2
EXPWY	9 3/8	12	45	3	6	13 1/2	8 1/4	4 1/2	2	2 3/4	2 1/4
FWY	12 1/2	16	60	4	8	18	11	6	2 11/16	5	3

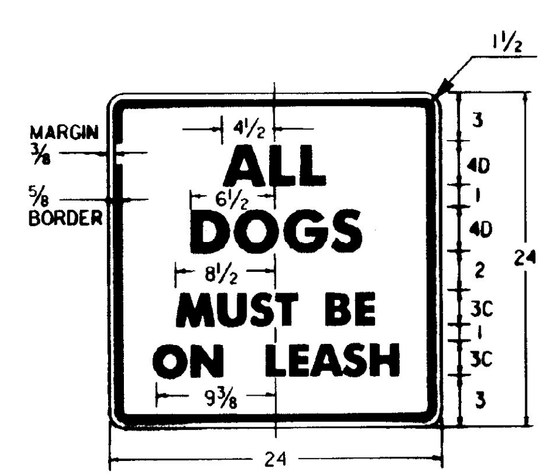

VR-648

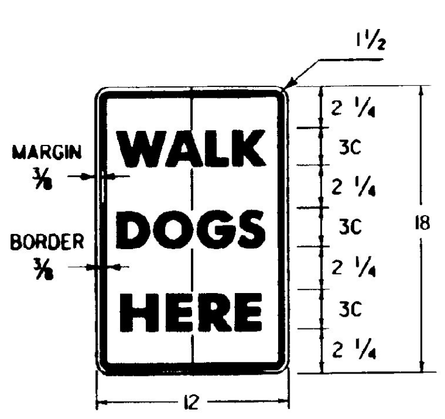

VR-541

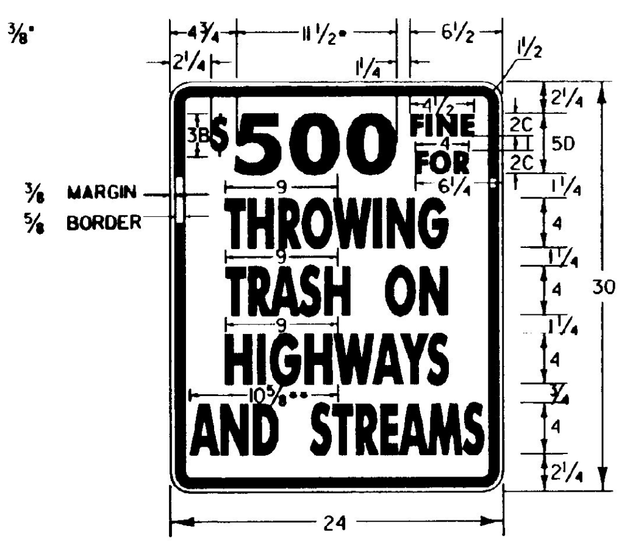

• REDUCE SPACING 40%
•• REDUCE SPACING 60%

VR-023b

GENERAL:

1. ALL DIMENSIONS IN INCHES.

COLORS:

THE REGULATORY SIGNS SHOWN ON THIS SHEET SHALL HAVE BLACK TEXT ON REFLECTORIZED WHITE BACKGROUND, UNLESS OTHERWISE NOTED. THE COLORS SHALL CONFORM WITH THE COLORS ADOPTED BY THE AMERICAN ASSOCIATION OF STATE HIGHWAY AND TRANSPORTATION OFFICIALS AND APPROVED BY THE DEPARTMENT OF TRANSPORTATION, FEDERAL HIGHWAY ADMINISTRATION.

MATERIALS:

THE SIGN BASE MATERIALS USED FOR REGULATORY SIGNS SHOWN ON THIS SHEET MAY BE ANY OF THE FOLLOWING OF THE MINIMUM THICKNESS NOTED.

	12'' X 18'' / 18'' X 24''	24'' X 12'' / 24'' X 24'' / 24'' X 30'' / 24'' X 36'' / 30'' X 24''	36'' X 48'' / 48'' X 60''
FLAT SHEET ALUMINUM	0.060''	0.080''	0.100''
HIGH DENSITY OVERLAID PLYWOOD	1/2''	1/2''	5/8''
GALVANIZED FLAT SHEET STEEL	18 GAGE	16 GAGE	14 GAGE

THE REFLECTIVE MATERIAL FOR GROUND MOUNTED SIGNS SHALL BE AASHTO TYPE II OR III WHITE REFLECTIVE SHEETING APPLIED TO THE ENTIRE BACKGROUND OF THE SIGN. WHEN MOUNTED OVERHEAD, ALL SIGNS SHALL HAVE ENCAPSULATED LENS REFLECTIVE SHEETING APPLIED TO THE ENTIRE BACKGROUND OF THE SIGN. THE TEXT OF THE SIGNS MAY BE LETTERING FILM, SILK SCREENED OR HAND PAINTED. HAND PAINTING MUST BE COMPARABLE IN QUALITY TO THE RESULTS OBTAINED BY SILK SCREENING.

SPECIFICATIONS:

REGULATORY SIGNS SHALL MEET THE VERMONT STANDARD SPECIFICATIONS FOR TRAFFIC SIGNS.

TEXT DESIGN:

LETTERS, DIGITS, ARROWS, SPACING AND TEXT DIMENSIONS SHALL CONFORM WITH THE ''STANDARD ALPHABET FOR HIGHWAY SIGNS AND PAVEMENT MARKINGS'' AND DESIGNS PRESCRIBED IN THE STANDARD HIGHWAY SIGNS AS SPECIFIED IN THE MANUAL ON UNIFORM TRAFFIC CONTROL DEVICES.

OTHER STDS.: NONE REQUIRED

REVISIONS AND CORRECTIONS

JAN. 23, 1989 - DATE OF ORIGINAL ISSUE
SEPT. 20, 1995 - ADDED AND DELETED SIGN DETAILS. ADDED SIGN ID NUMBERS, MINOR NOTE REVISIONS
FEB. 2, 1998 - REMOVED VR-023, REPLACED WITH VR-278

APPROVED

DIRECTOR OF PROJECT DEVELOPMENT

DIRECTOR OF CONSTRUCTION AND MAINTENANCE

REGULATORY SIGN DETAILS

/traf/std/stdel44.dgn: stdel44.i

VERMONT AGENCY OF TRANSPORTATION

STANDARD
E-144