AS BUILTS
DATE: 7/21/99

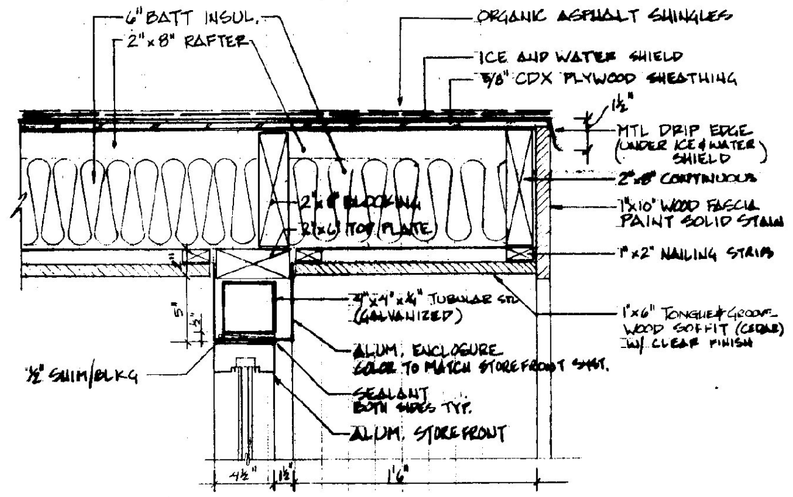

01 / 3.5 CONNECTION - STOREFRONT/ROOF
VESTIBULE 1 1/2"=1'-0"

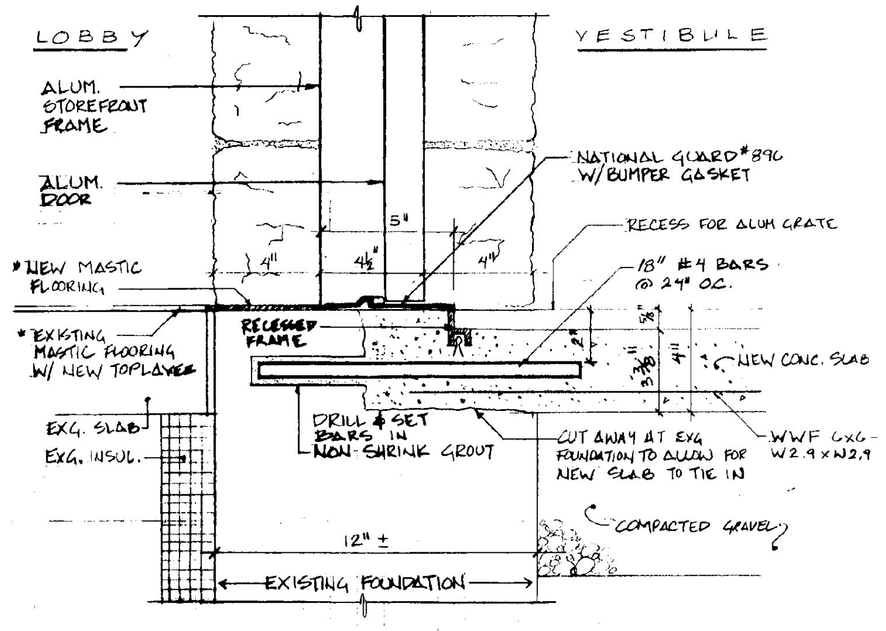

* NEW AND EXISTING MASTIC FLOORING SHALL BE AT THE SAME LEVEL AND SHALL APPEAR AS ONE CONTINUOUS FLOORING MATERIAL

05 / 3.5 2ND ENTRY THRESHOLD
VESTIBULE DOOR #202 3"=1'-0"

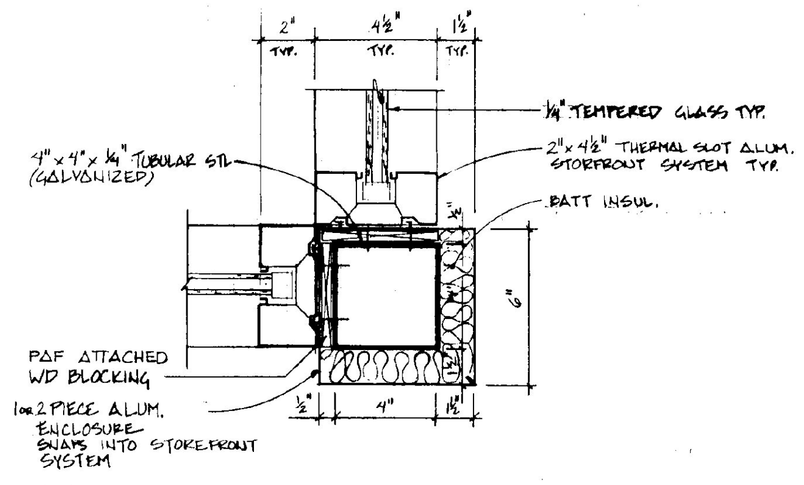

06 / 3.5 CORNER ENCLOSURE
VESTIBULE 3"=1'-0"

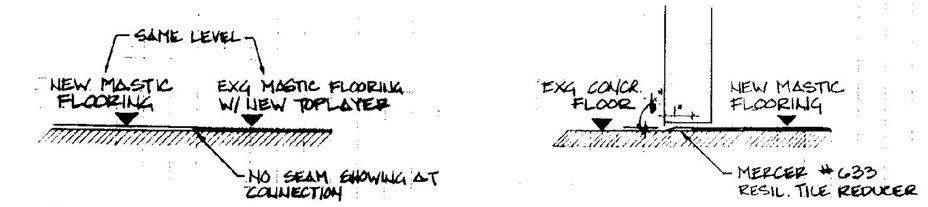

11 / 3.5 CONNECTION - NEW / EXG FLOORING
NO SCALE

12 / 3.5 TRANSITION - THRESHOLD
UTILITY DOOR #207 NO SCALE

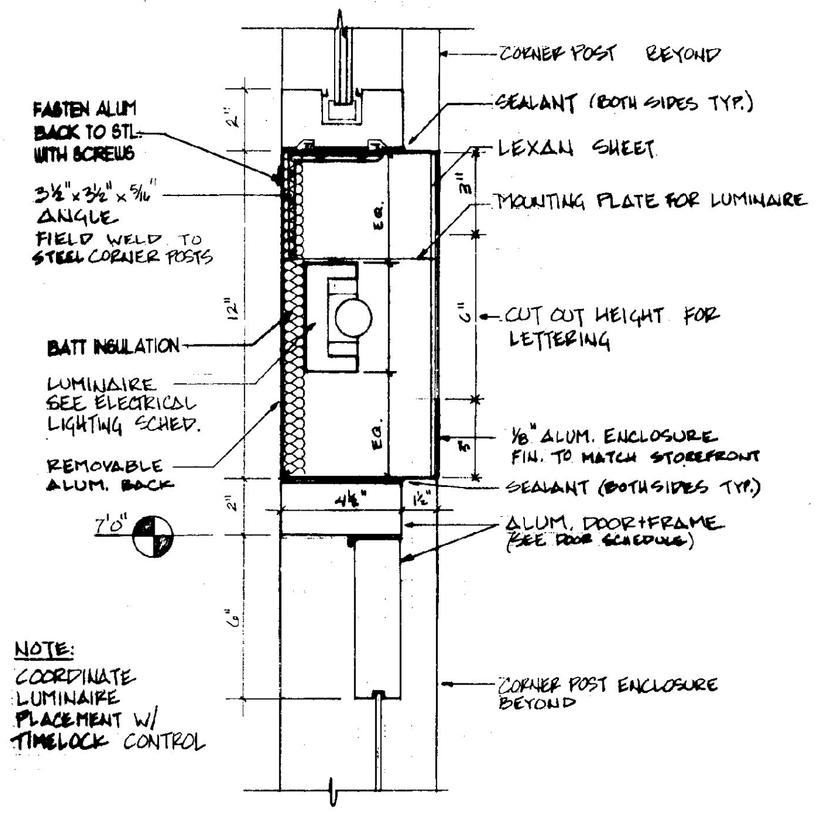

02 / 3.5 ENTRY - BACKLIT SIGN & DOOR HEAD
VESTIBULE 3"=1'-0"

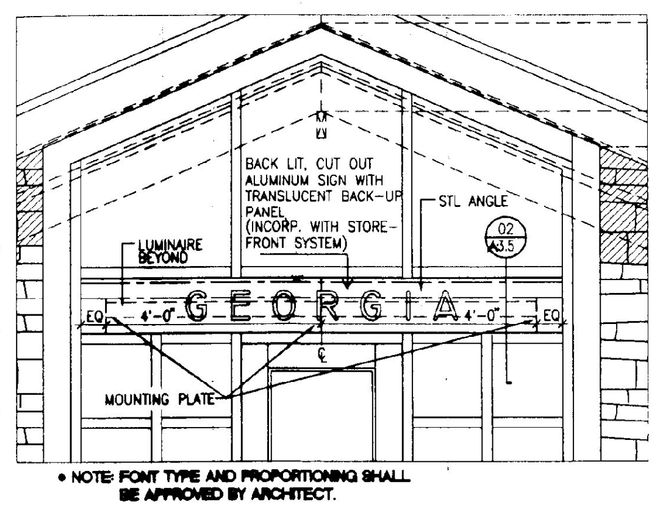

02A / 3.5 SIGN ELEVATION
1-1/2" = 1'

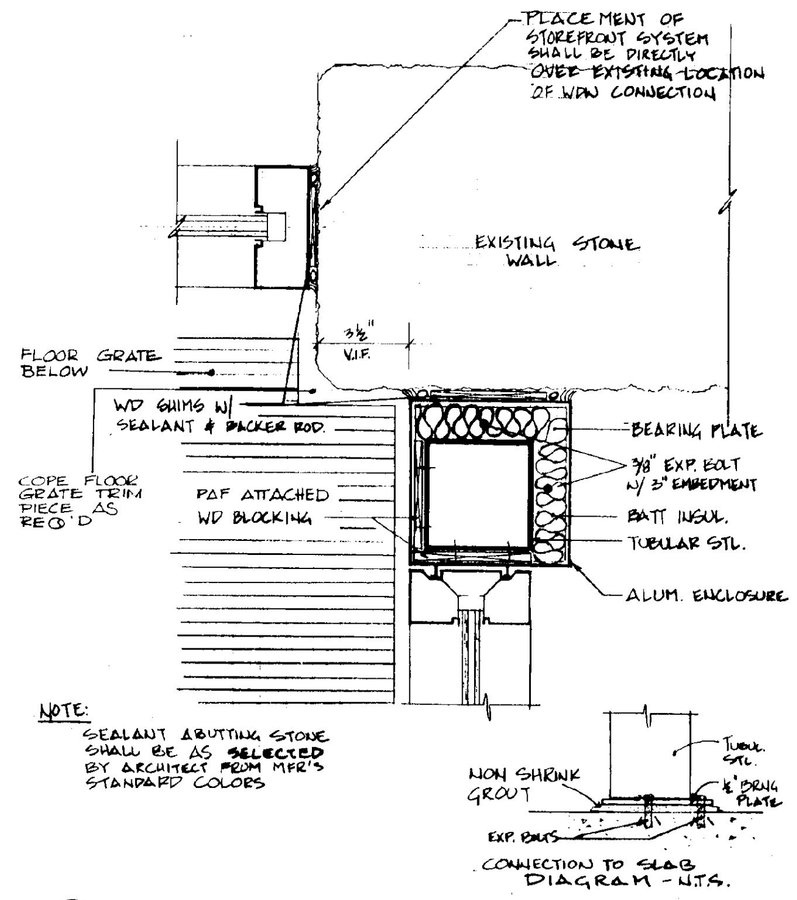

07 / 3.5 CONNECTION - STOREFRONT & EXISTING STONE WALL
VESTIBULE 3"=1'-0"

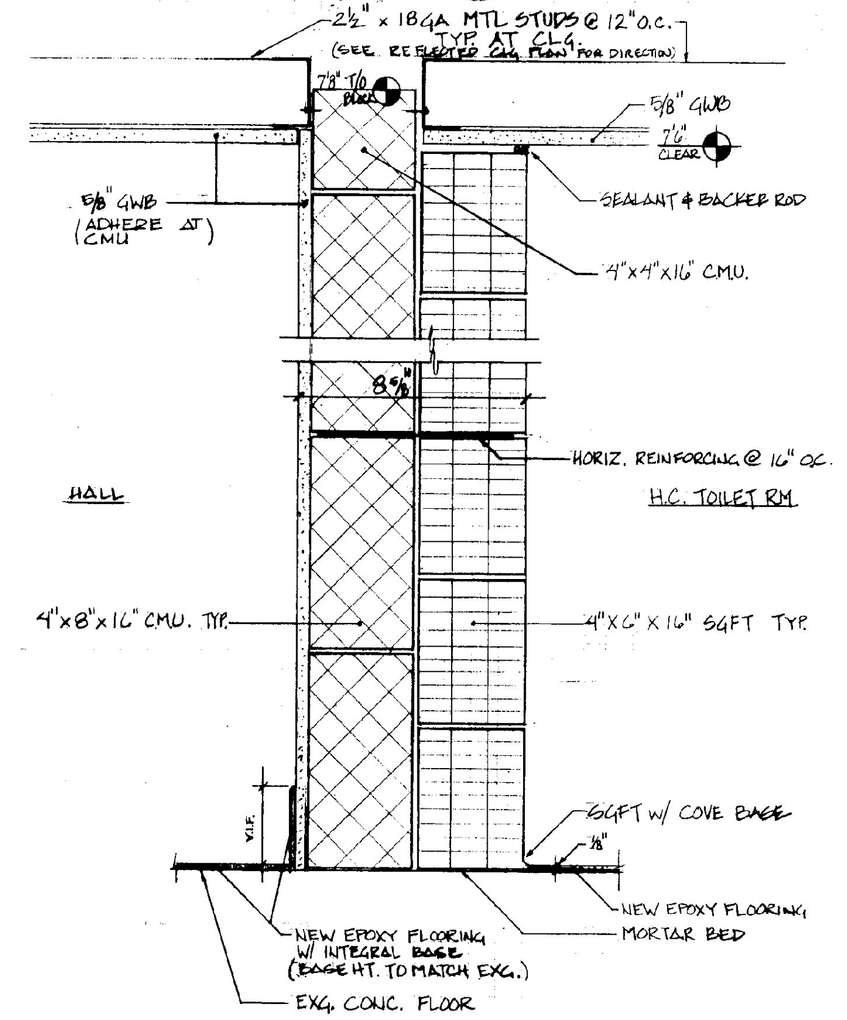

10 / 3.5 SECTION THROUGH WALL
UNISEX TLT 3"=1'-0"

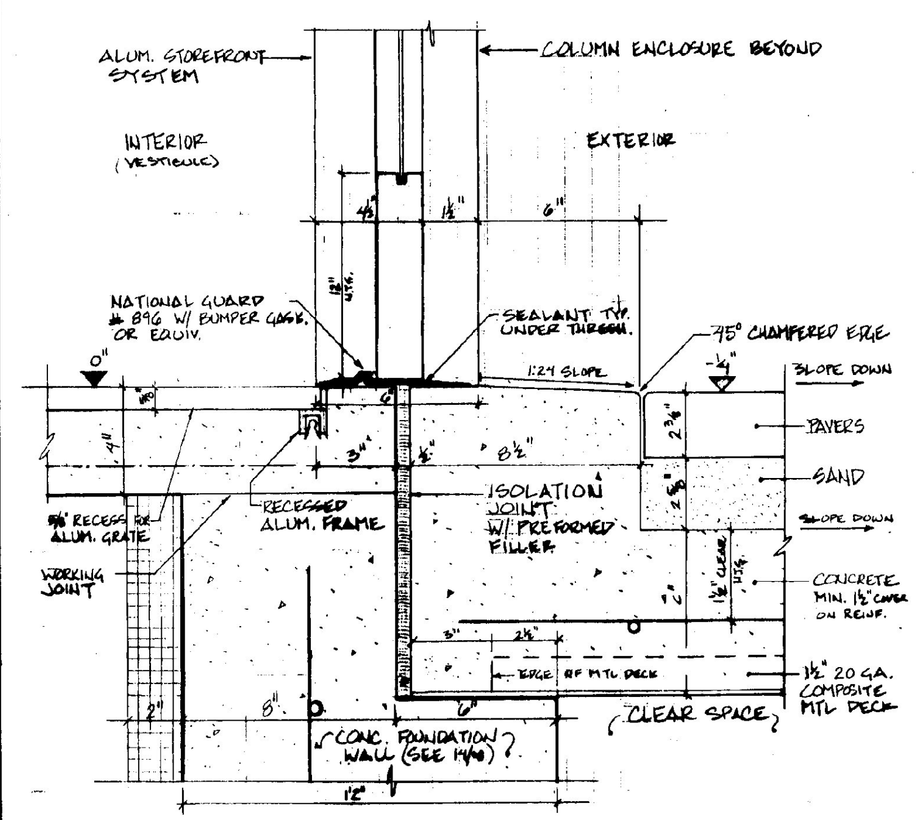

03 / 3.5 ENTRY - THRESHOLD SECTION
VESTIBULE DOOR #201 3"=1'-0"

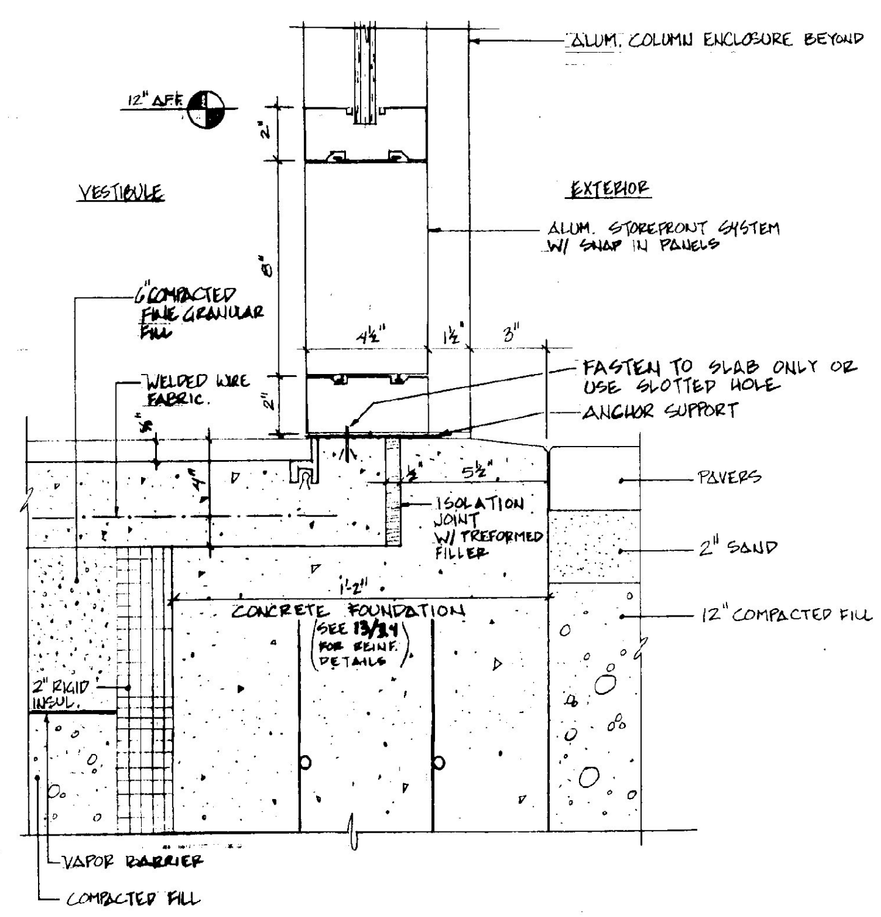

04 / 3.5 EXTERIOR STOREFRONT SILL
VESTIBULE 3"=1'-0"

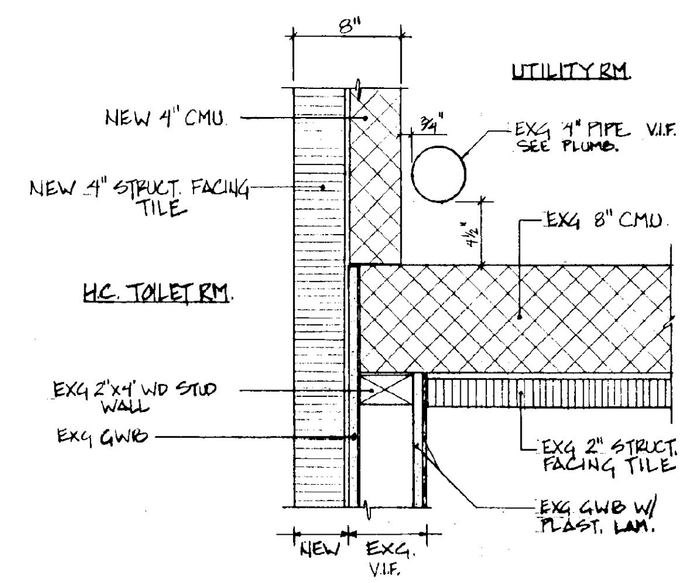

08 / 3.5 CONNECTION - WOMENS RESTRM / UTIL. RM / UNISEX RESTRM
1 1/2"=1'-0"

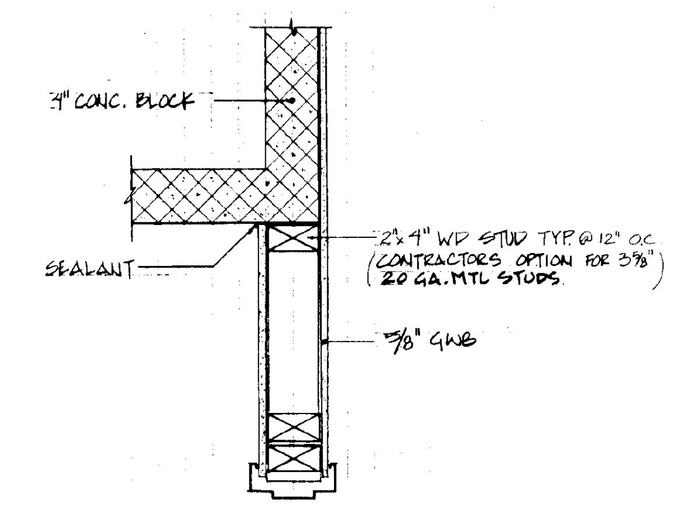

09 / 3.5 CONNECTION - CMU/WD STUD WALL
CLOSET RM #08 1 1/2"=1'-0"

STATE OF VERMONT
DEPARTMENT OF BUILDINGS AND GENERAL SERVICES
AGENCY OF ADMINISTRATION
MONTPELIER, VERMONT

GEORGIA INTERSTATE 89 REST AREAS
NORTHBOUND AND SOUTHBOUND

REGISTERED ARCHITECT JOHN DOE NO. 1158 STATE OF VERMONT

DATE: AUGUST 21, 1998	SCALE: AS NOTED	REVISIONS:	DRAWING NAME: MISCELLANEOUS DETAILS
DRAWN BY: MBB	PROJECT NO. IM 089-3 (30)		DRAWING NO.: A-3.5
CHECKED BY: JBA			

PROJECTS\ADA\GEORGIA-NS .5 Wed Jul 22 15:10:54 1998 Plotter By: Michael S. Siemaszko