AS BUILTS
DATE: 7/21/99

DETAIL A
NOT TO SCALE

DETAIL B
NOT TO SCALE

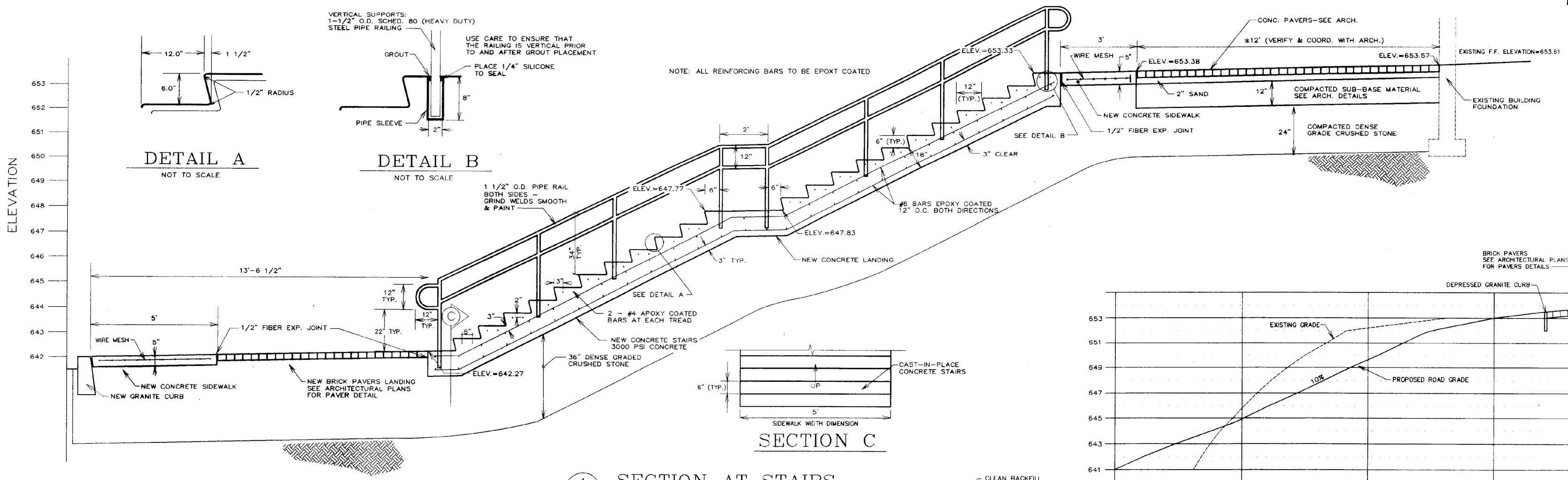

4 / S-1.3 SECTION AT STAIRS
SCALE: 1"=2'

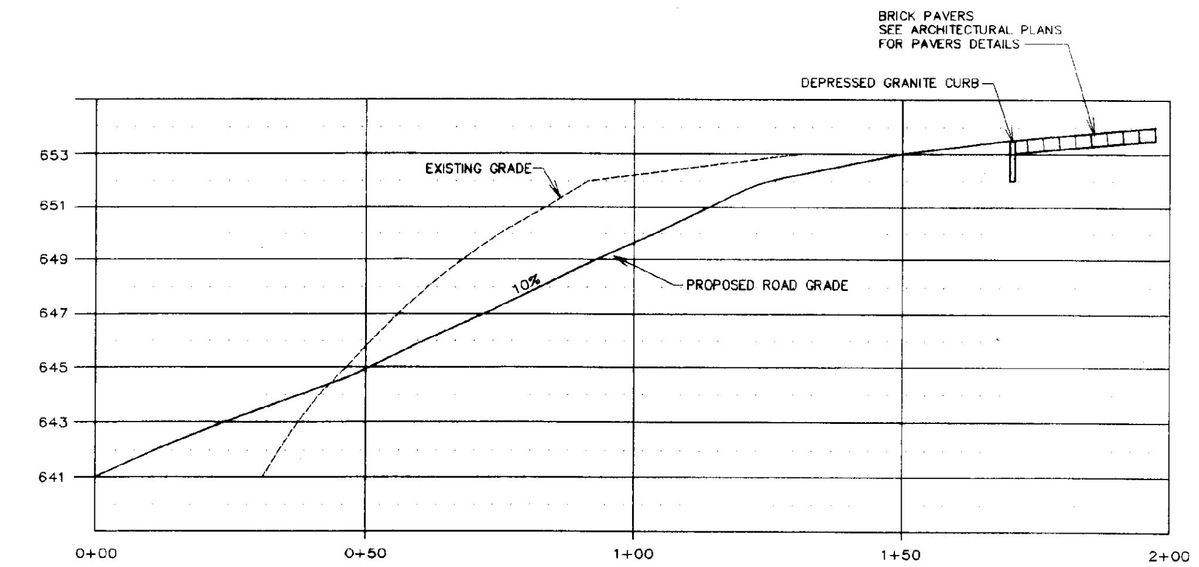

8 / S-1.3 ROAD PROFILE
SCALE: HORIZONTAL: 1"=20'
VERTICAL: 1"=4'

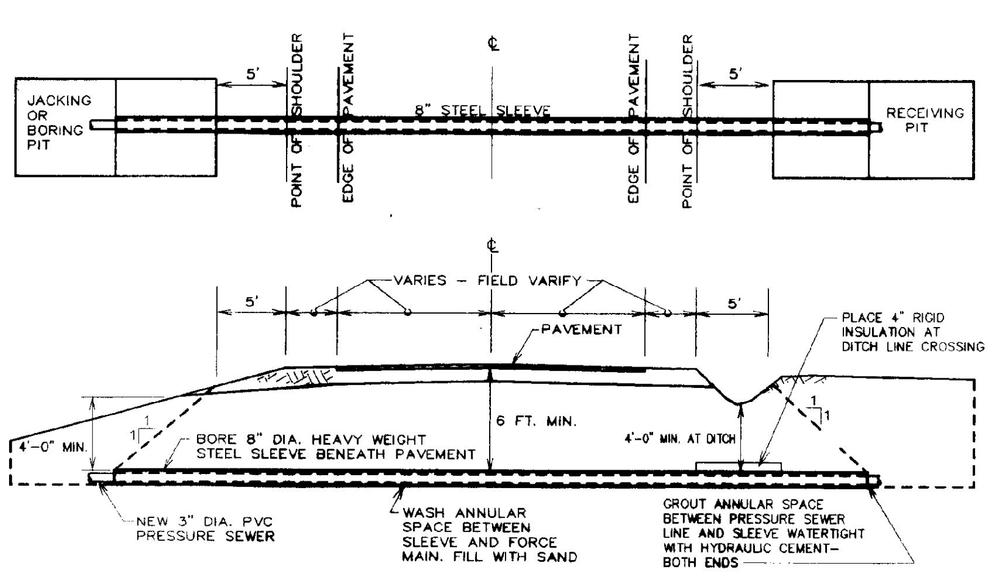

2 / S-1.3 HIGHWAY CROSSING DETAIL
NOT TO SCALE

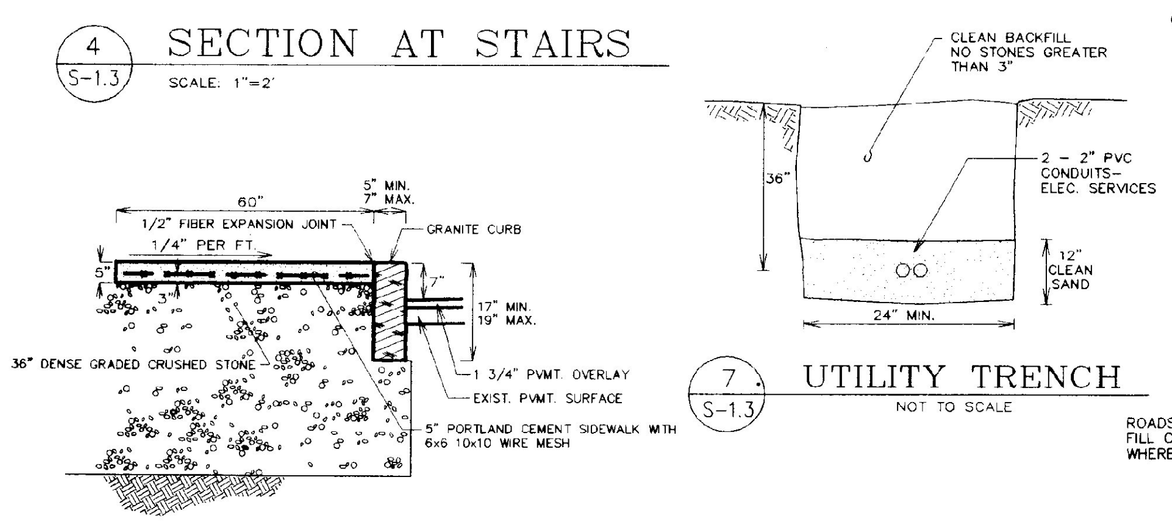

3 / S-1.3 TYP. SIDEWALK & CURB
NOT TO SCALE

7 / S-1.3 UTILITY TRENCH
NOT TO SCALE

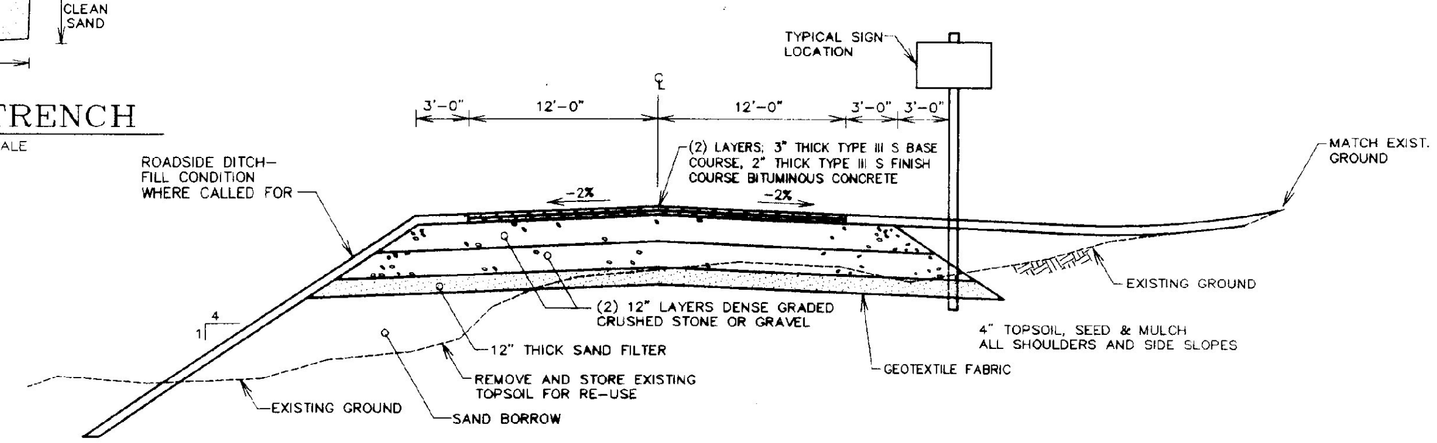

7 / S-1.3 TYP. ROAD SECTION
NOT TO SCALE

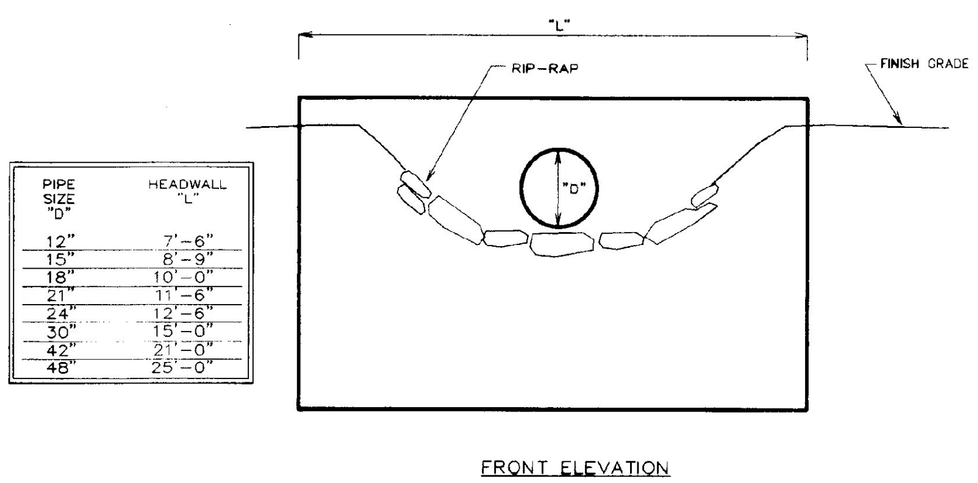

PIPE SIZE "D"	HEADWALL "L"
12"	7'-6"
15"	8'-9"
18"	10'-0"
21"	11'-6"
24"	12'-6"
30"	15'-0"
42"	21'-0"
48"	25'-0"

1 / S-1.3 CONCRETE HEADWALL
NOT TO SCALE

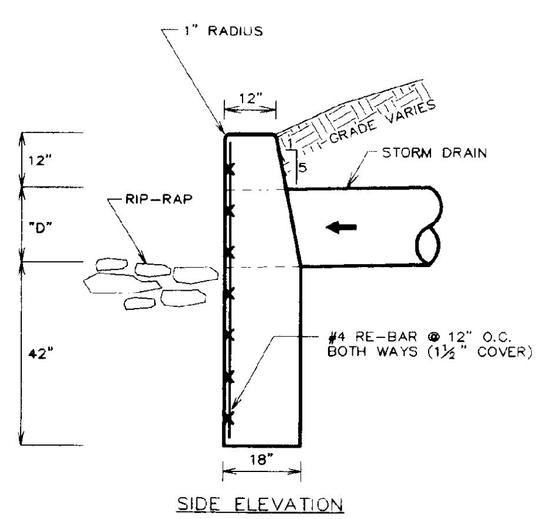

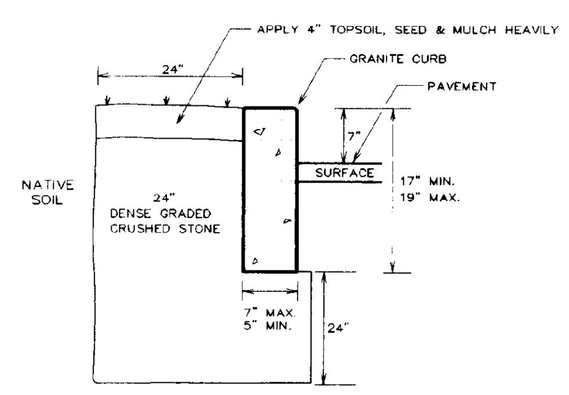

5 / S-1.3 TYP. GRANITE CURB
NOT TO SCALE

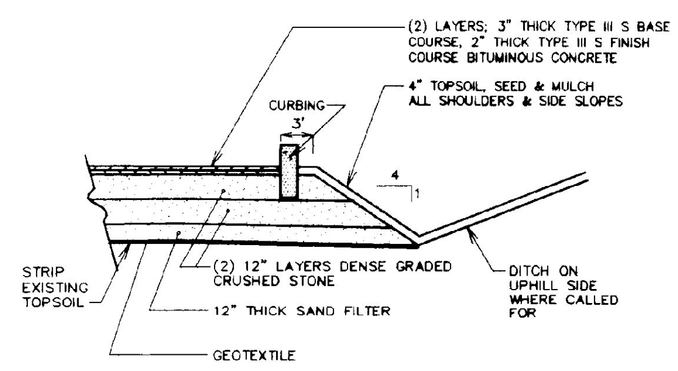

6 / S-1.3 TYP. PARKING LOT
NOT TO SCALE

STATE OF VERMONT
DEPARTMENT OF BUILDINGS AND GENERAL SERVICES
AGENCY OF ADMINISTRATION
MONTPELIER, VERMONT

GEORGIA INTERSTATE 89 REST AREAS
NORTHBOUND AND SOUTHBOUND

DATE: AUG 21, 1998	SCALE: AS NOTED	REVISIONS: 8/12/98: Miscellaneous	DRAWING NAME: DETAILS
DRAWN BY: WHP/Lac/CRC	PROJECT NO. 97041		DRAWING NO: S-1.3
CHECKED BY: SHR/PHC			

SHEET ____ OF ____