CODE	TIME	BY

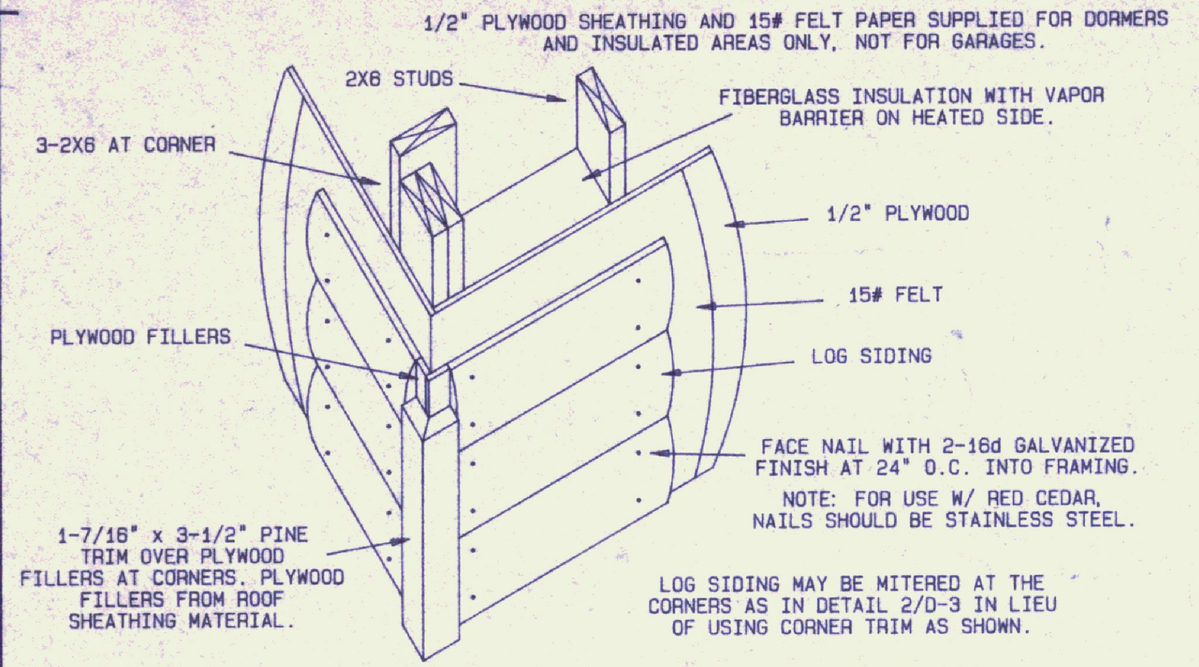

LOG SIDING CORNER DETAIL @ DORMER OR OTHER INSULATED 2X6 FRAME WALL (1/D-3)

SCALE: 1"=1'-0"

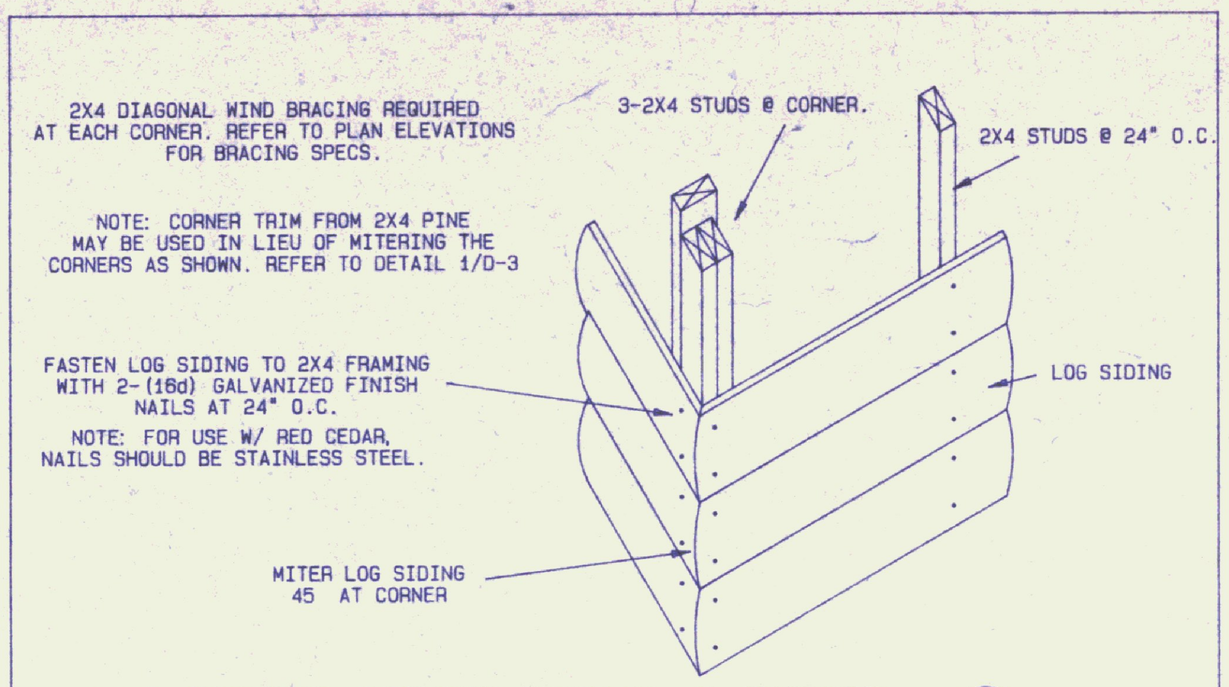

LOG SIDING CORNER DETAIL @ GARAGE OR OTHER NON INSULATED 2X4 FRAME WALL. (2/D-3)

SCALE: 1"=1'-0"

GENERAL NOTES:

FLASHING IS RECOMMENDED AT HEAD TRIM & SIDES OF ALL DOORS IN LOG WALLS EXCEPT AT SIDES OF GARAGE O.H. DOORS. FLASHING BY OTHERS.

CAUTION:

NORTHEASTERN RECOMMENDS SEALING WITH BACKER ROD & CAULKING AS SHOWN HOWEVER, IF SPRAY FOAM INSULATION IS USED TO SEAL AT DOORS OR WINDOWS, READ MANUFACTURER'S INSTRUCTIONS CAREFULLY FOR PROPER INSTALLATION PROCEDURES. APPLY ONLY A SMALL BEAD OF SPRAY FOAM AND DO NOT ATTEMPT TO FILL THE ENTIRE SPACE. SPRAY FOAM EXPANDS GREATLY AND COULD CAUSE ABNORMAL PRESSURE ON JAMBS RESTRICTING OPERATION OF MOVING PARTS. SPRAY FOAM INSULATION BY OTHERS.

AT ROUGH OPENING, INSTALL BACKER ROD & CAULKING SEAL. FILL ALL REMAINING SPACES WITH FIBERGLASS INSULATION BEFORE INSTALLING TRIM.

SEE MANUFACTURER'S INSTALLATION INSTRUCTIONS FOR ADDITIONAL INFORMATION ON ASSEMBLY OF GARAGE OVERHEAD DOORS. INSTRUCTIONS INCLUDED WITH OH.DOOR HARDWARE PACKAGE.

DETAILS ON THIS SHEET ARE GENERAL AND MAY NOT APPLY TO ALL BUILDINGS.

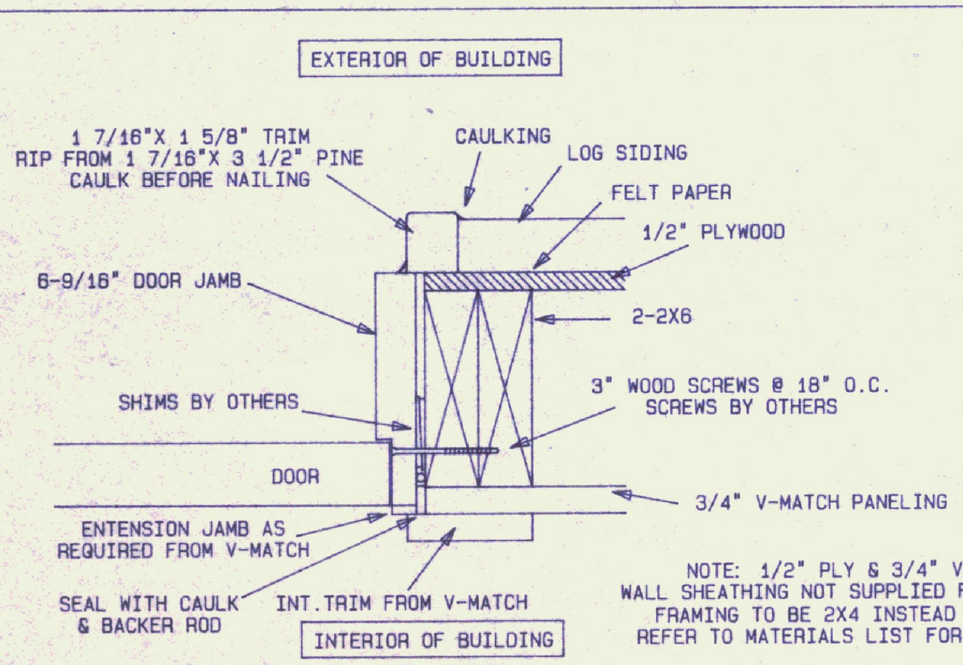

NOTE: 1/2" PLY & 3/4" V-MATCH WALL SHEATHING NOT SUPPLIED FOR GARAGES. FRAMING TO BE 2X4 INSTEAD OF 2X6 REFER TO MATERIALS LIST FOR SPEC'S.

3/0 DOOR JAMB DETAIL AT 2X6 FRAME WALL (3/D-3)

SCALE: 3"= 1'-0"

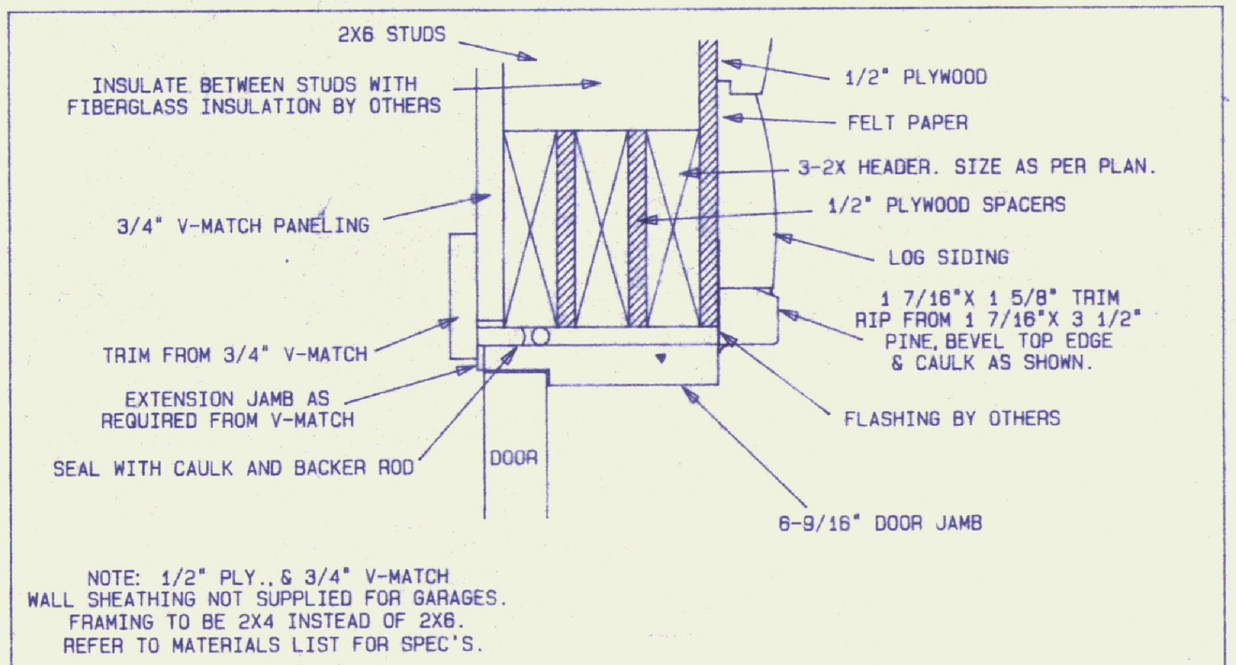

NOTE: 1/2" PLY., & 3/4" V-MATCH WALL SHEATHING NOT SUPPLIED FOR GARAGES. FRAMING TO BE 2X4 INSTEAD OF 2X6. REFER TO MATERIALS LIST FOR SPEC'S.

3/0 DOOR HEAD DETAIL AT 2X6 FRAME WALL (4/D-3)

SCALE: 3"= 1'-0"

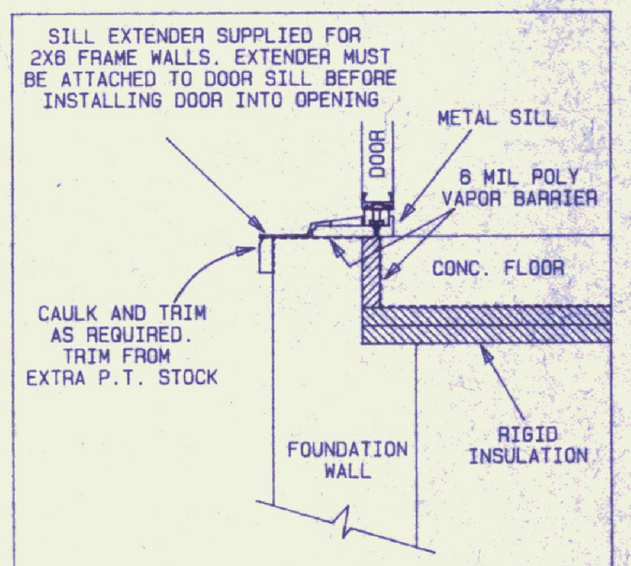

DETAIL SHOWN AT DAYLIGHT BASEMENT 2X6 FRAME WALL

3/0 DOOR SILL DETAIL @ 2X6 FRAME WALL (5/D-3)

SCALE: 1 1/2" = 1'-0"

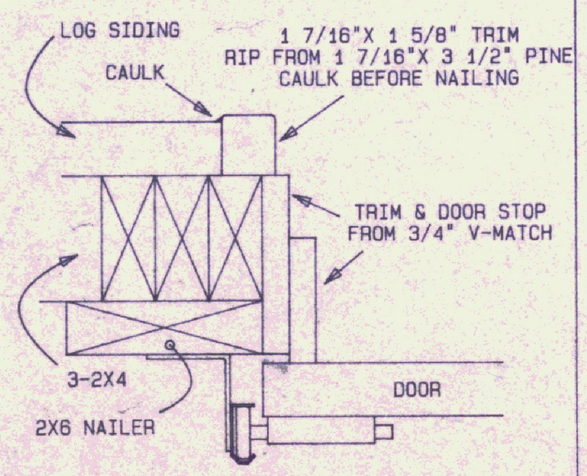

9'X7' OVERHEAD DOOR JAMB DETAIL IN 2X4 FRAME WALL (6/D-3)

SCALE: 3"= 1'-0"

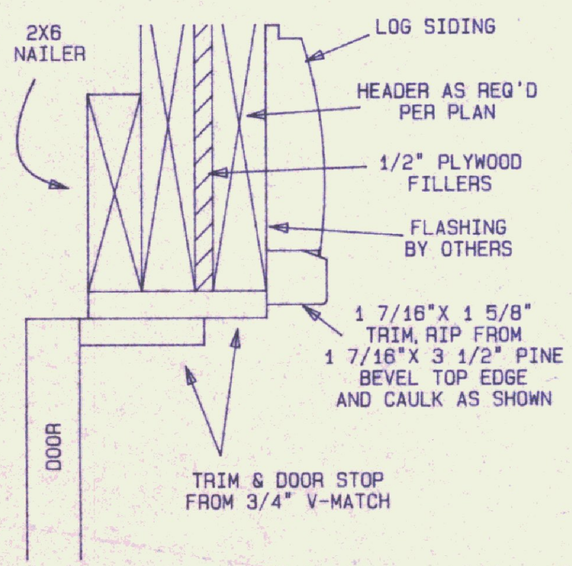

9'X7' OVERHEAD DOOR HEAD DETAIL IN 2X4 FRAME WALL (7/D-3)

SCALE: 3"= 1'-0"

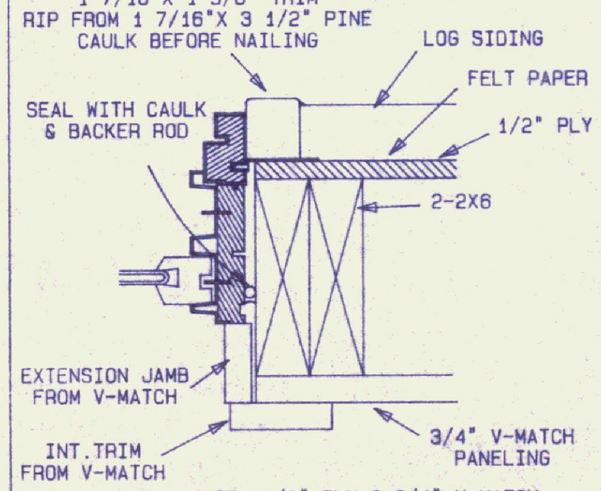

NOTE: 1/2" PLY & 3/4" V-MATCH WALL SHEATHING NOT SUPPLIED FOR GARAGES. GARAGE FRAMING TO BE 2X4 IN LIEU OF 2X6 REFER TO MATERIALS LIST FOR SPEC'S.

WINDOW JAMB DETAIL @ 2X6 FRAME WALL (8/D-3)

SCALE: 3"= 1'-0"

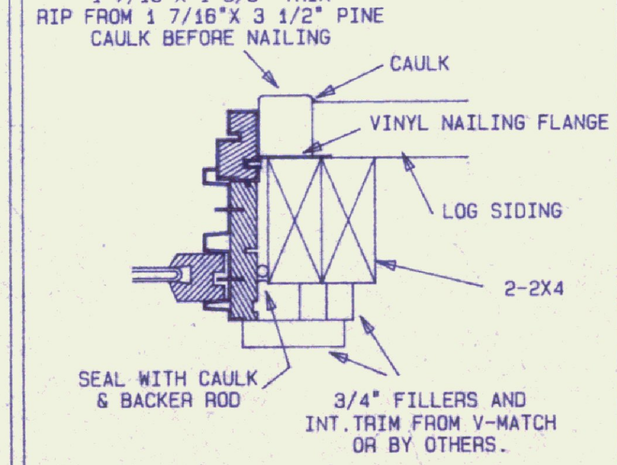

NOTE: 1/2" PLY & 3/4" V-MATCH WALL SHEATHING NOT SUPPLIED FOR GARAGES. GARAGE FRAMING TO BE 2X4 IN LIEU OF 2X6 REFER TO MATERIALS LIST FOR SPEC'S.

WINDOW JAMB DETAIL @ 2X4 FRAME WALL (9/D-3)

SCALE: 3"= 1'-0"

Northeastern Log Homes

© 1993 by NLH Inc.

NO.	REVISION	DATE	BY	CKD

WINDOWS

MODEL: STANDARD DETAILS D-96

DRN MG

CKD SLO

CODES: DOOR & WINDOW INSTALLATION

PROJECT NAME: IN LOG SIDING FRAME WALLS

DATE JAN. 1, 1995

SCALE AS NOTED

PLAN NO NE

SHT. NO. D-3

Oce Bruning, Inc. 78419 Form 16578