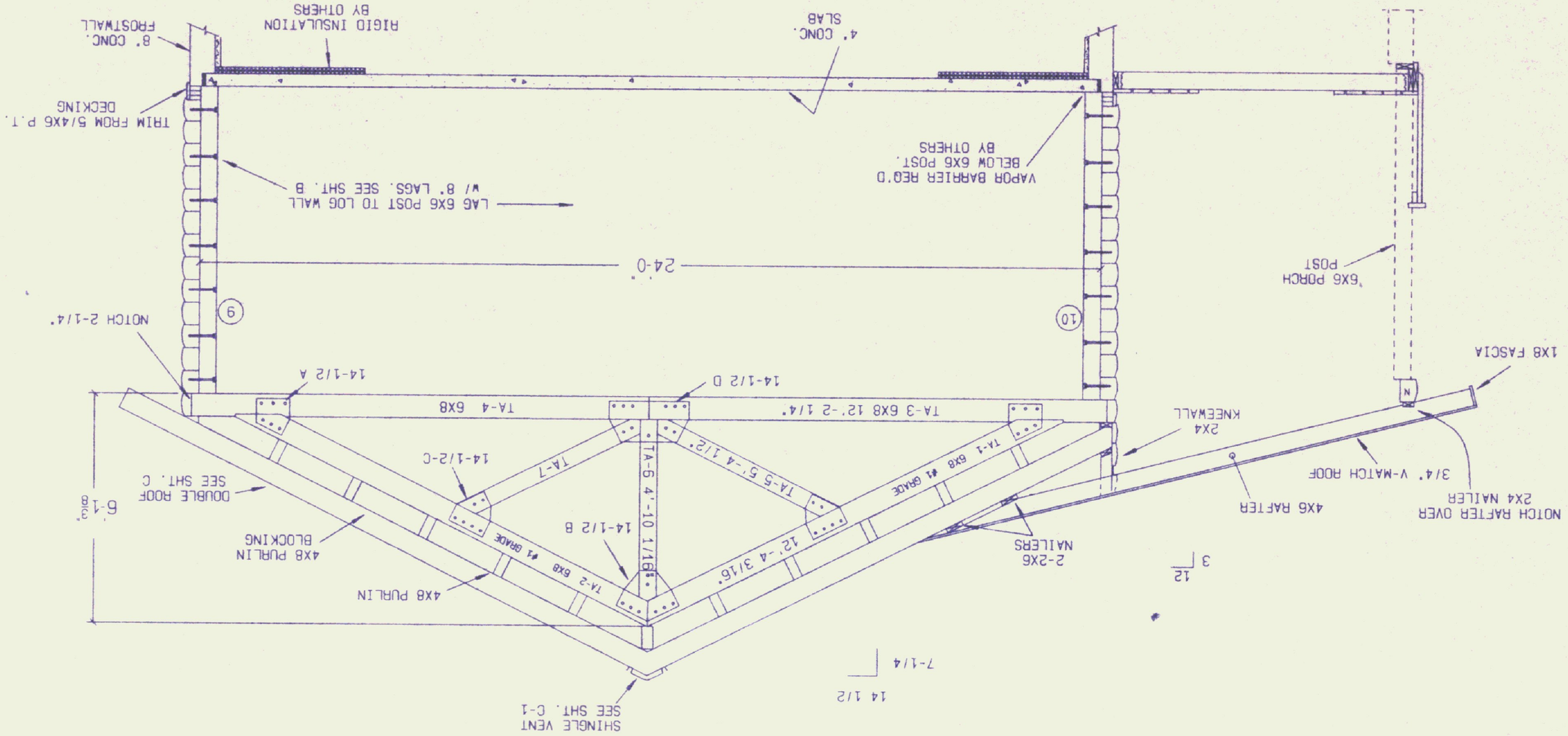

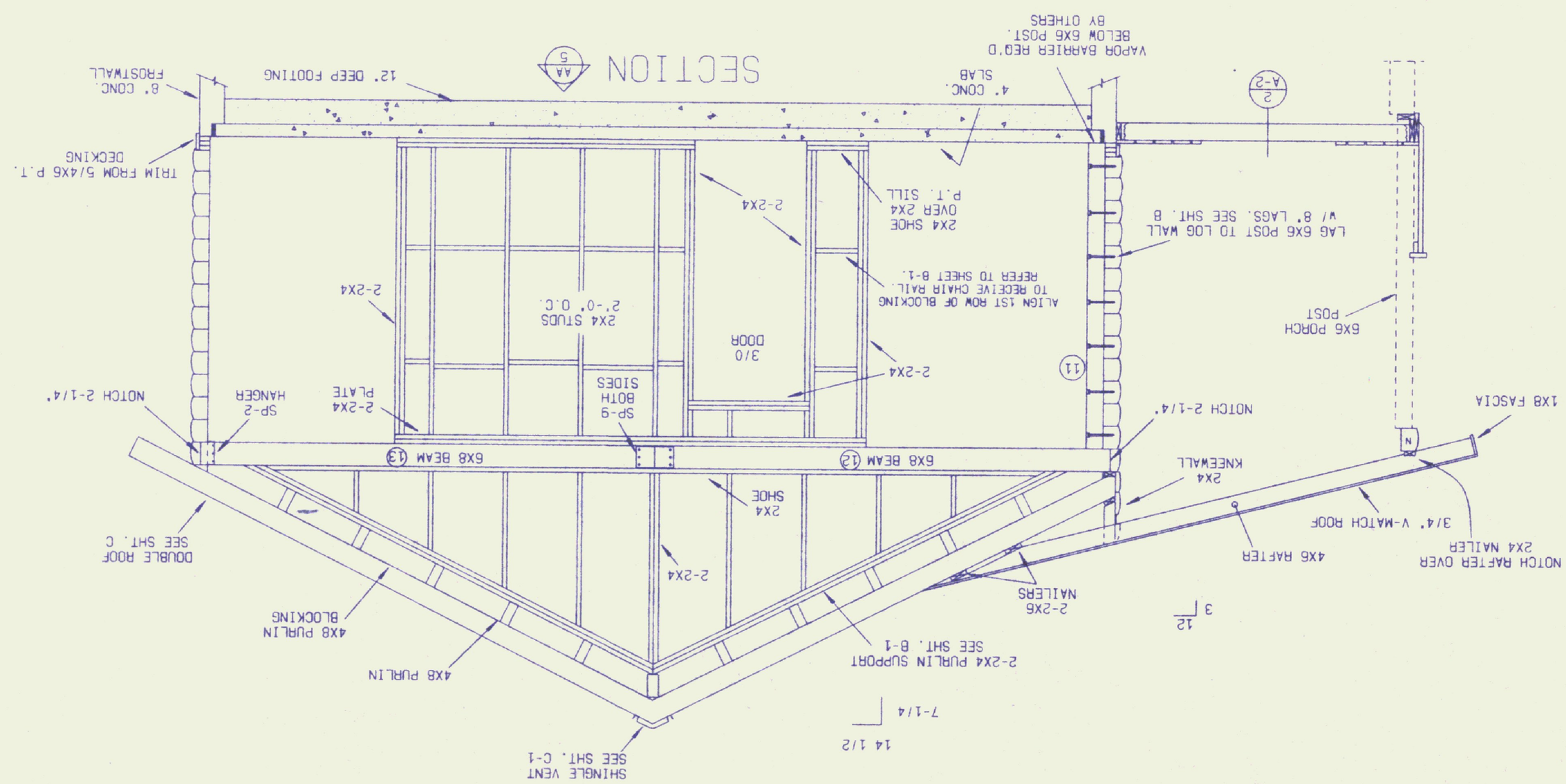

TRUSS & PURLIN BLOCK DIMENSIONS ARE FOR MANUFACTURING PURPOSES ONLY.

3/4" DIA. X 6-1/2" MACHINE BOLTS W/ NUTS SUPPLIED TO FIT FACTORY PRE-DRILLED TRUSS MEMBERS AND 1/8" STEEL PLATES.

5/8" DIA. X 2-1/2" LAG BOLTS TO FIT 1/8" STEEL PLATES AT TRUSS ARMS. CEILING FRAMING &/OR PORCH TRUSSES. 7/16" DIA. PILOT HOLE REQUIRED.

NO	REVISION	DATE	BY	CKD

VENDORS | MODEL

DWN ZR | CODES

CKD SAP

PROJECT NAME: NECCO INC. / ALBURG WELCOME CENTER

DATE 9-24-96 | PLAN NO. NE -15923 | SHT. NO. 5

SCALE 3/8"= 1'-0"

northeastern log homes

© 1995 by NLM Inc.