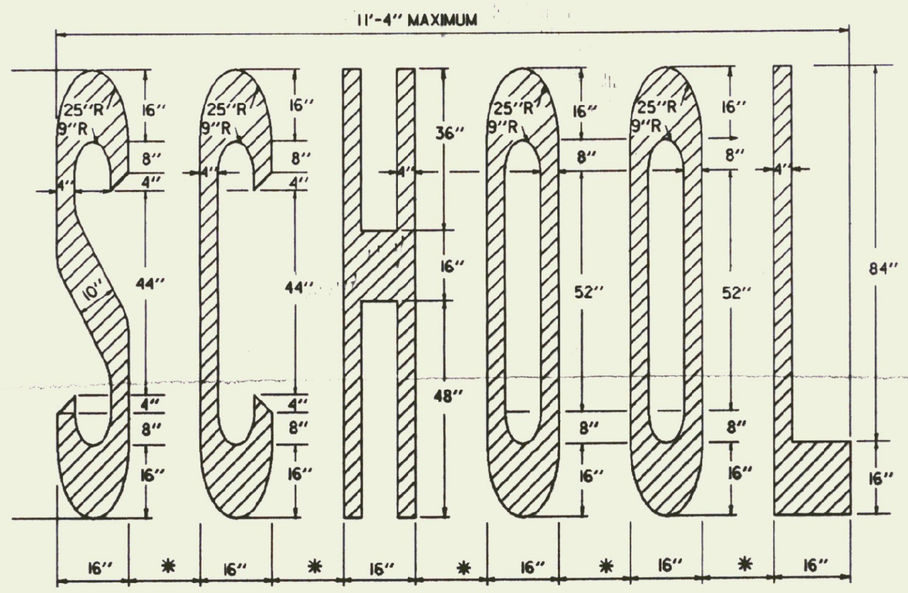

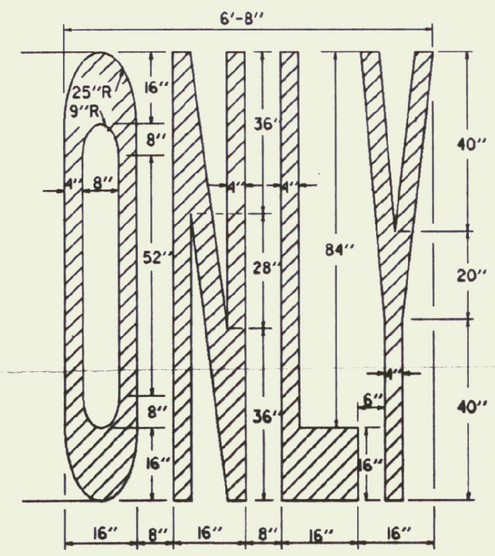

* (4"-8") - ADJUST TO AVAILABLE PAVEMENT WIDTH

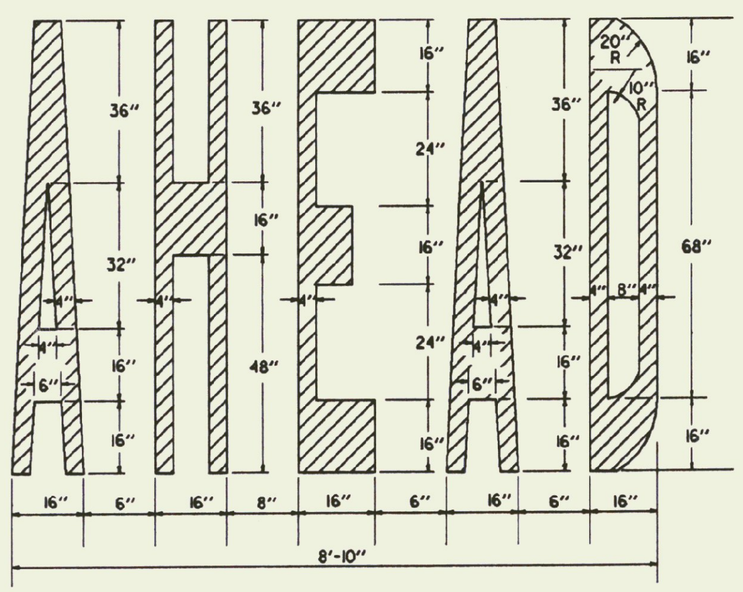

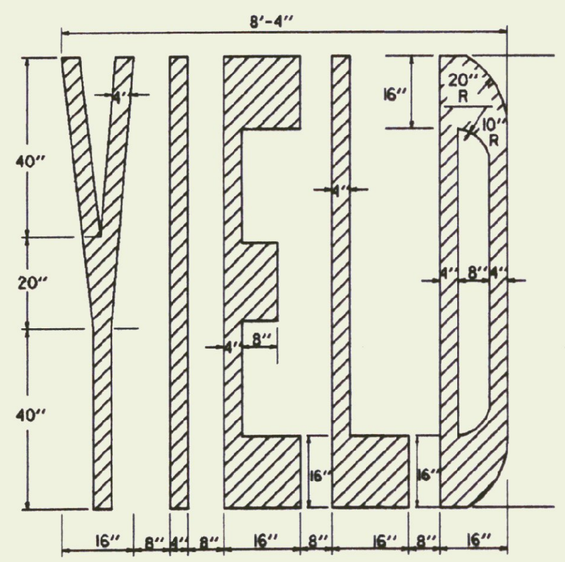

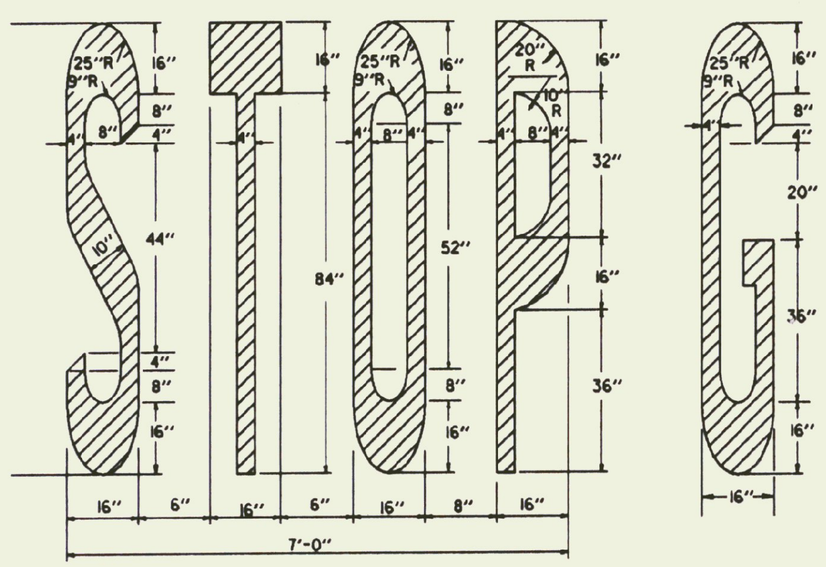

THE LETTER "G" PERTAINS TO THE WORD "SIGNAL" FOR OTHER LETTERS, SEE ABOVE.

LETTER HEIGHT

DIMENSIONS ARE FOR 8' - 4" LETTER HEIGHTS. A LESSER HEIGHT OF 8' - 0" IS ACCEPTABLE AS LONG AS THE DIMENSIONS ARE PROPORTIONAL TO THE DETAILS SHOWN SEE NOTE BELOW.

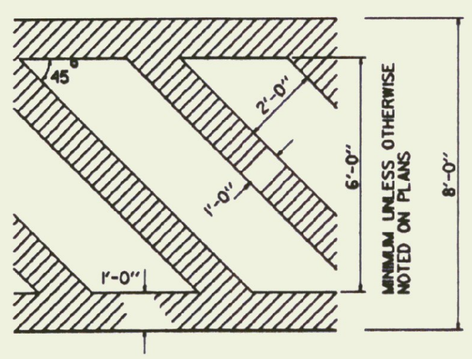

ARROWS AND WORD MARKINGS THAT CONFORM TO THE DIMENSIONS SHOWN ON THIS SHEET OR AS DETAILED IN THE BOOKLET ENTITLED "STANDARD ALPHABETS FOR HIGHWAY SIGNS AND PAVEMENT MARKINGS" AND THE "MANUAL ON UNIFORM TRAFFIC CONTROL DEVICES" (CURRENT EDITION) PREPARED BY THE FEDERAL HIGHWAY ADMINISTRATION WILL BE ACCEPTABLE.

LETTER IN WORD MARKING AND CROSSWALK DETAILS

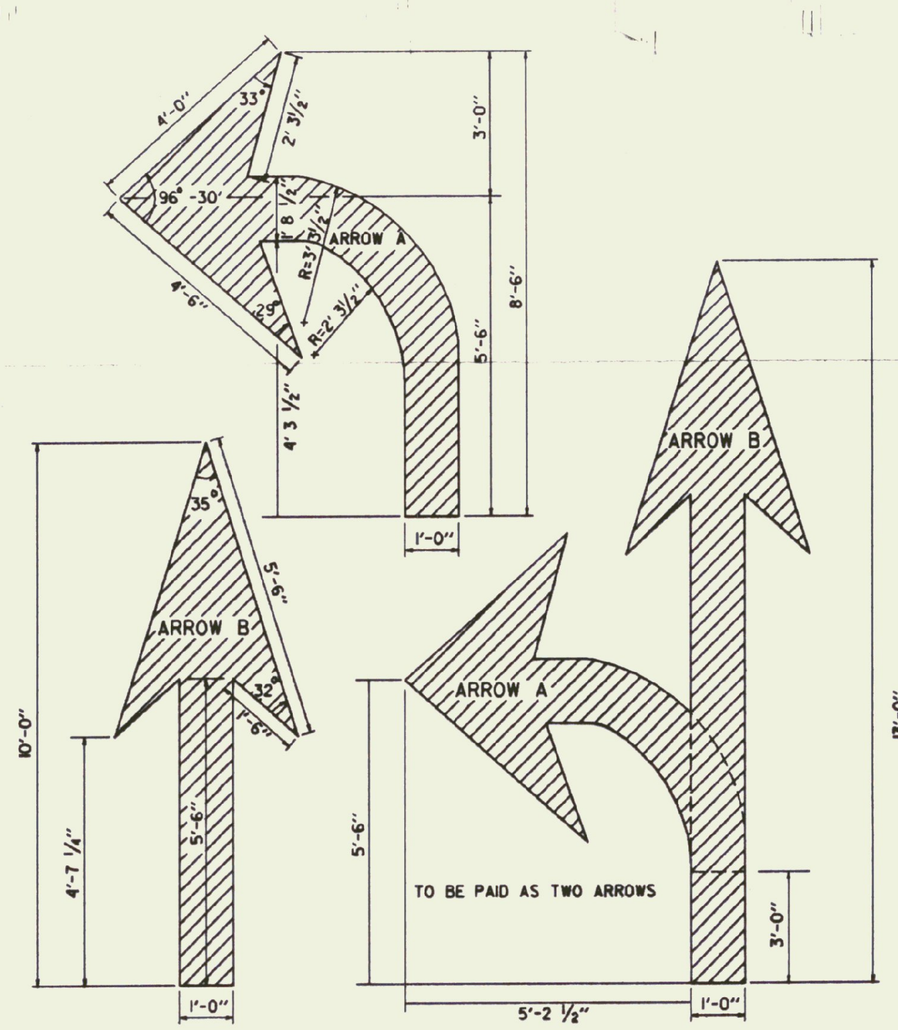

ARROW DETAILS

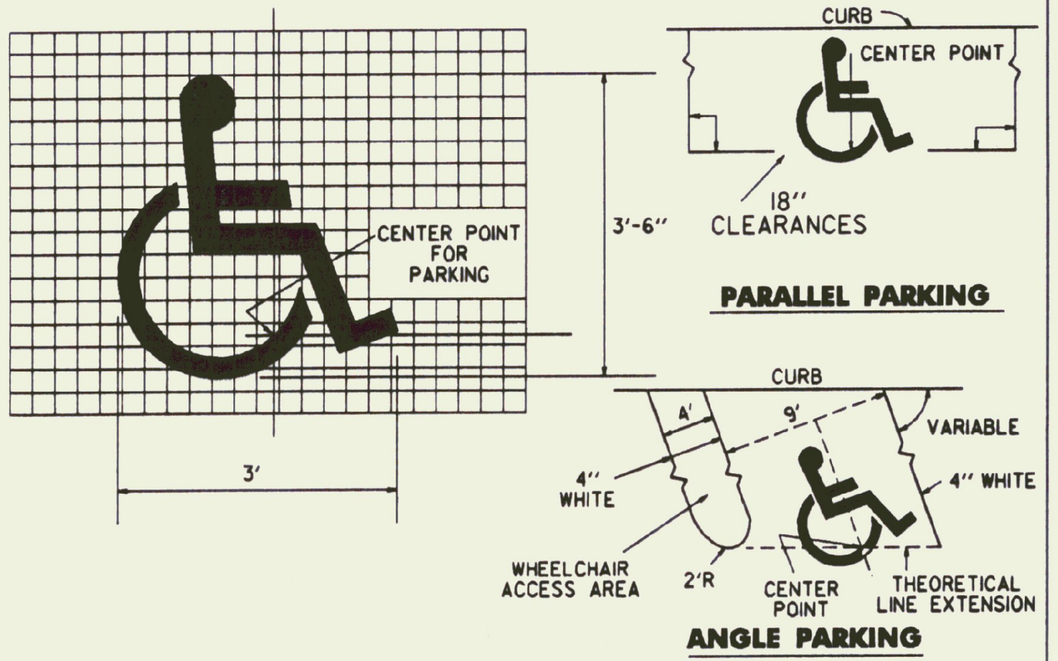

HANDICAPPED PAVEMENT MARKING DETAILS

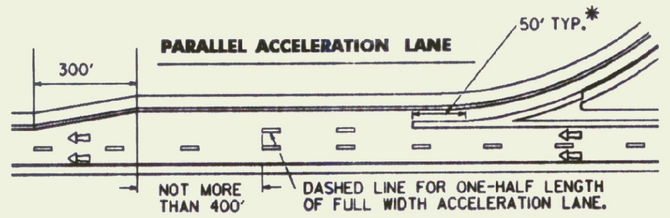

* MAY BE MADE LONGER TO EMPHASIZE SITUATIONS WHERE THE CROSSING REQUIRES UNUSUAL CARE SUCH AS HIGH VOLUME MERGE AREAS.

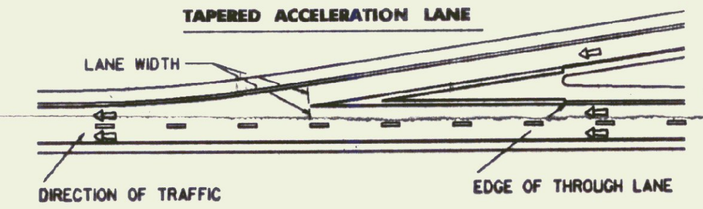

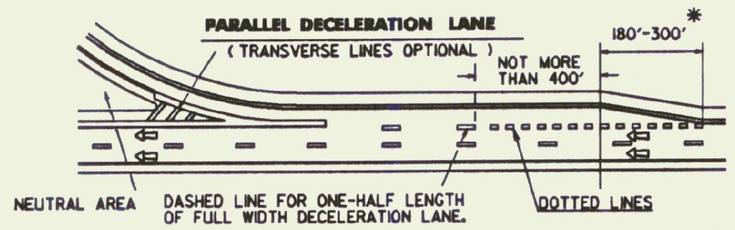

* SHORTER TAPERS GIVE A BETTER TARGET VALUE, HOWEVER ALIGNMENT MAY DICTATE A LONGER TAPER. RESIDENT ENGINEER SHALL ESTIMATE LENGTH.

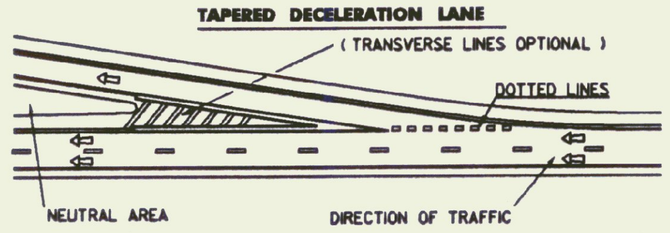

TRANSVERSE LINES SHALL CONSIST OF 8" WHITE LINES SPACED 5'-0" C-C AND SET AT 45° TO MAIN LINE EDGE LINES. THESE MARKINGS SHALL BE USED TO INCREASE VISIBILITY DUE TO DIFFICULT VERTICAL OR HORIZONTAL ALIGNMENT, AS DIRECTED BY THE RESIDENT ENGINEER.

RAMP MARKINGS

LEGEND

- 4" WHITE LINES
- 4" YELLOW LINES
- 8" CHANNELIZATION WHITE LINES
- 4" WHITE DOTTED LINES (2' SOLID - 4' GAP)

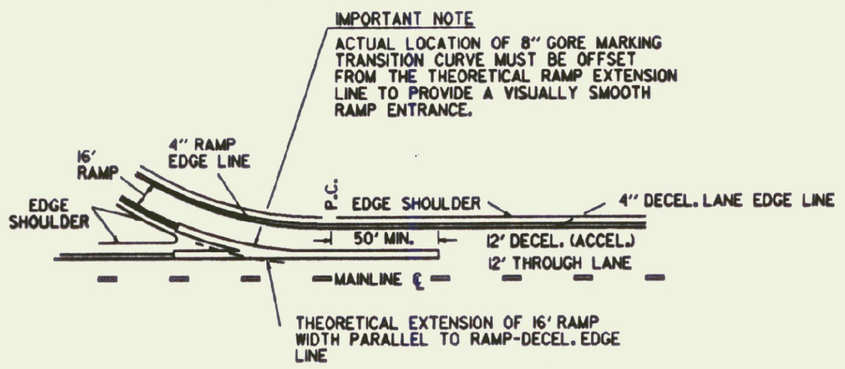

DETAIL - GORE MARKING TRANSITION CURVE

REVISIONS AND CORRECTIONS

JAN. 23, 1989 - ADDED DOTTED LINES, "SIGNAL" DIMENSIONS, CLARIFIED LETTER HEIGHT.

APPROVED

SEPT. 10, 1987
DATE

David B Kelley
CHIEF ENGINEER

Arthur Gore
DIRECTOR OF PLANNING AND PRECONSTRUCTION

Gordon B. MacArthur
TRAFFIC AND SAFETY ENGINEER

PAVEMENT MARKING DETAILS

VERMONT AGENCY OF TRANSPORTATION

STANDARD
E-191