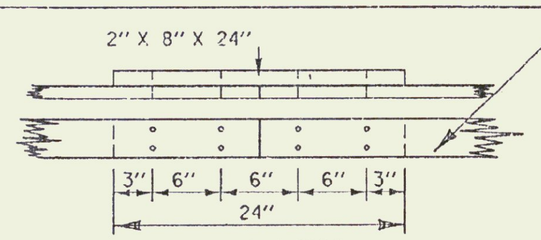

SPLICE DETAIL
8-20d SPIKES
STAKE SPACING 5'- 2"

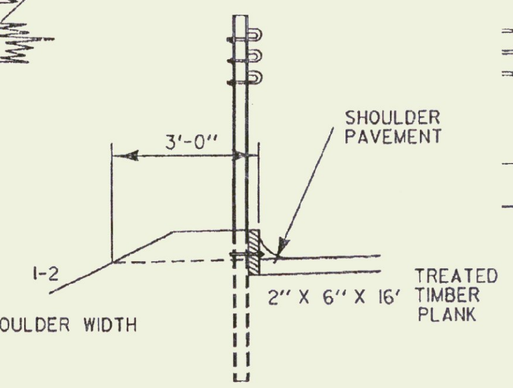

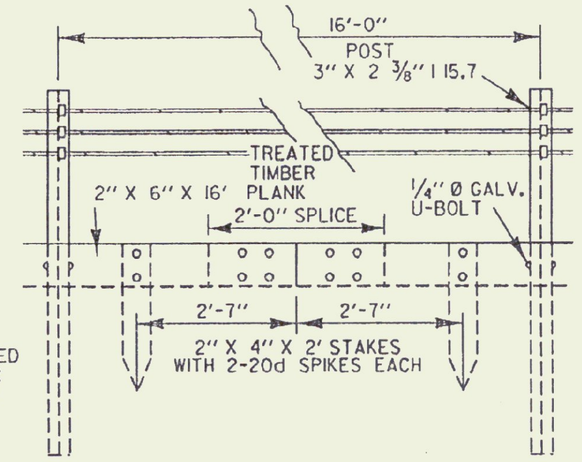

TREATED TIMBER CURB WITH CABLE GUARDRAIL W/STEEL OR WOOD POST

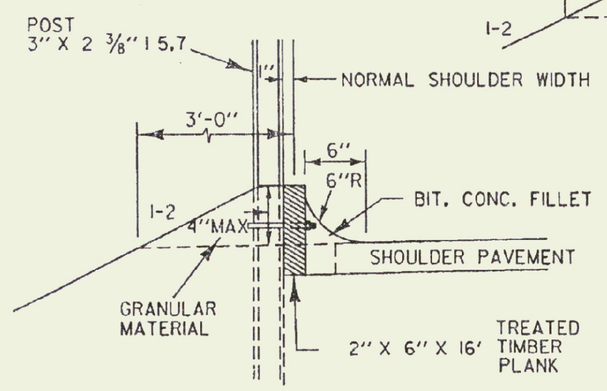

TREATED TIMBER CURB WITH STEEL POSTS AND U-BOLT FASTENER.

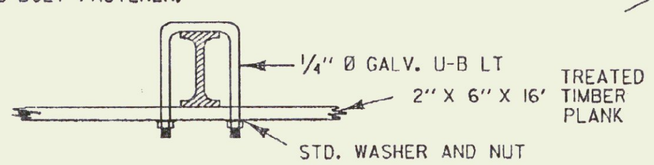

U-BOLT SHAPED TO FIT ANY DESIGNATED STEEL POST

AFTER THE CURB HAS BEEN IN PLACE 7 DAYS, THE EXPOSED SURFACE SHALL BE TREATED WITH TWO COATS OF EMULSIFIED ASPHALT OR TAR EMULSION.

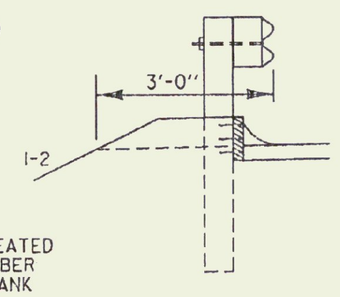

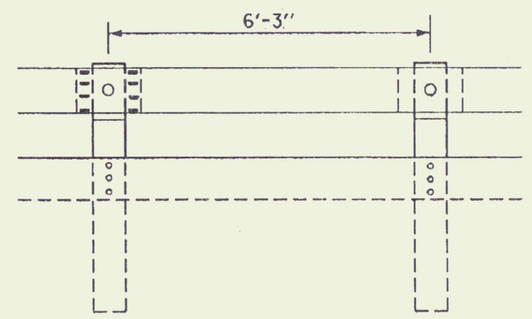

TREATED TIMBER CURB WITH STEEL BEAM GUARDRAIL

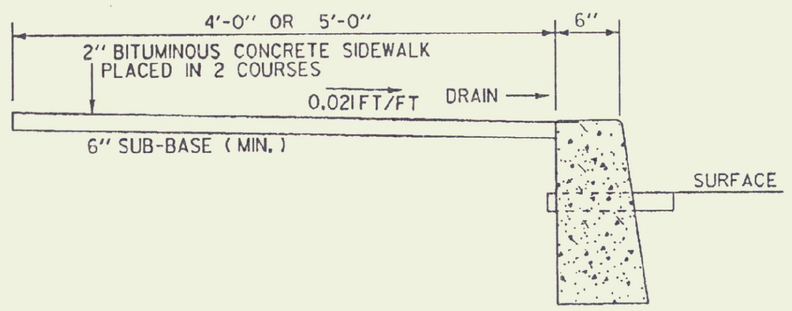

BITUMINOUS CONCRETE SIDEWALK

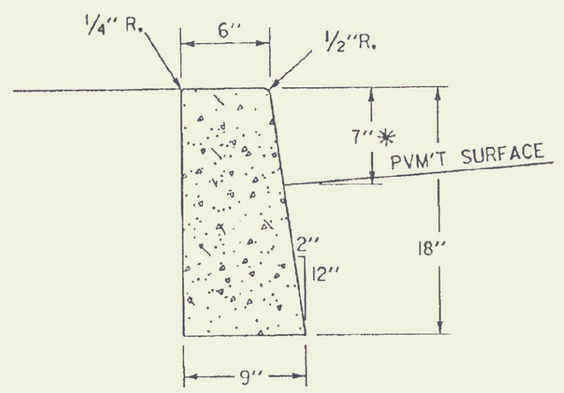

WHEN CONCRETE CURB IS CONSTRUCTED ADJACENT TO CONCRETE SIDEWALK, ASPHALT TREATED FELT SHALL BE PLACED BETWEEN THE SIDE - WALK AND CURB.

SEE SPECIFICATIONS FOR DETAILS ON EXPANSION, CONSTRUCTION JOINTS, AND LENGTHS OF SECTIONS.

END AREA = 0.94 S.F.

CAST IN PLACE CONCRETE CURB, TYPE B

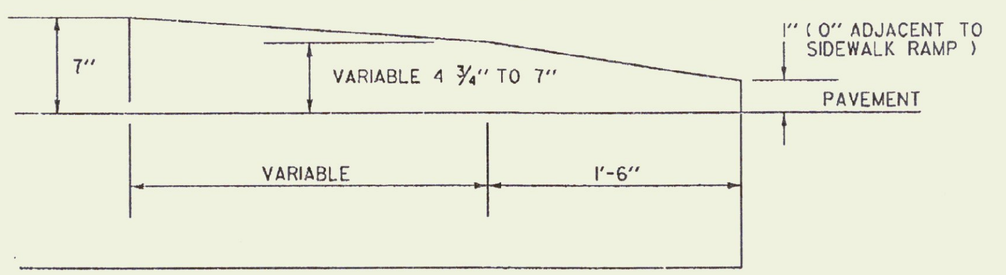

DETAIL OF CONCRETE CURB END FOR PRECAST REINFORCED CONCRETE CURB OR CAST IN PLACE CONCRETE CURB

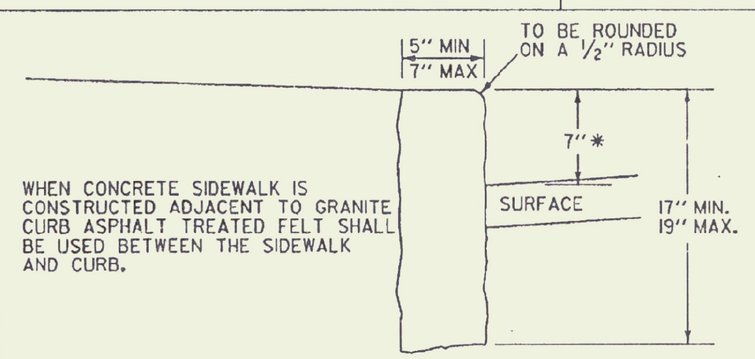

WHEN CONCRETE SIDEWALK IS CONSTRUCTED ADJACENT TO GRANITE CURB ASPHALT TREATED FELT SHALL BE USED BETWEEN THE SIDEWALK AND CURB.

VERTICAL GRANITE CURB

NOTE

* HEIGHT NOT TO EXCEED 4" WHEN CURBING IS INSTALLED ADJACENT TO GUARDRAIL (STANDARD SHAPE TO BE BURIED TO THIS DEPTH)

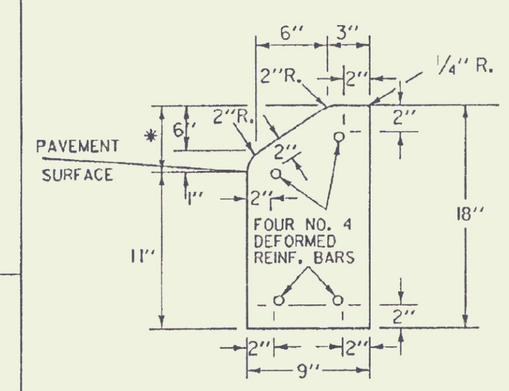

WHEN CONCRETE CURB IS CONSTRUCTED ADJACENT TO CONCRETE SIDEWALK, ASPHALT TREATED FELT SHALL BE PLACED BETWEEN THE SIDE - WALK AND CURB.

SEE SPECIFICATIONS FOR DETAILS ON EXPANSION, CONSTRUCTION JOINTS, AND LENGTHS OF SECTIONS.

END AREA = 1.00 S.F.

PRECAST REINFORCED CONCRETE CURB, TYPE A

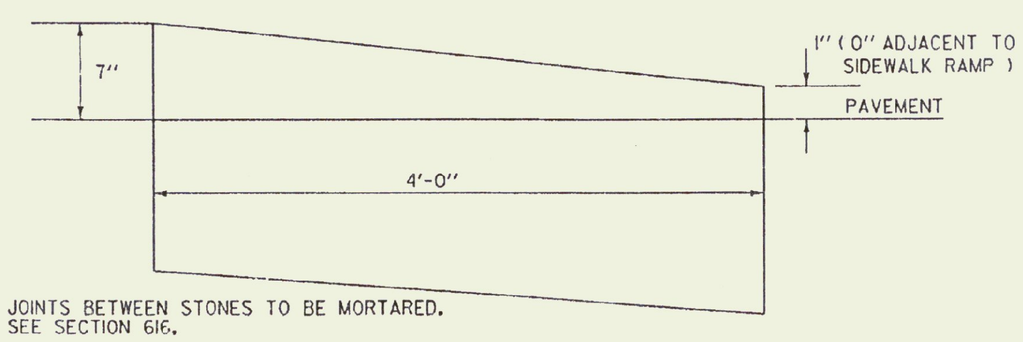

JOINTS BETWEEN STONES TO BE MORTARED. SEE SECTION 616.

DETAIL OF GRANITE CURB END FOR VERTICAL GRANITE CURB

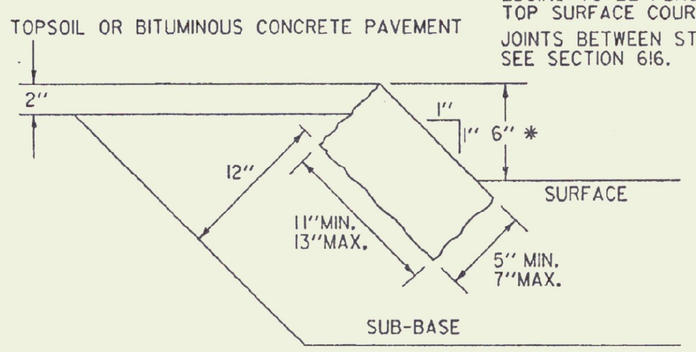

GRANITE SLOPE EDGING

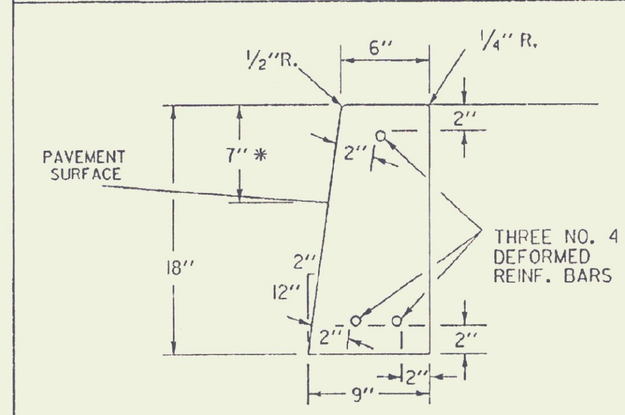

WHEN CONCRETE CURB IS CONSTRUCTED ADJACENT TO CONCRETE SIDEWALK, ASPHALT TREATED FELT SHALL BE PLACED BETWEEN THE SIDE - WALK AND CURB.

SEE SPECIFICATIONS FOR DETAILS ON EXPANSION, CONSTRUCTION JOINTS, AND LENGTHS OF SECTIONS.

END AREA = 0.94 S.F.

PRECAST REINFORCED CONCRETE CURB, TYPE B

REVISIONS AND CORRECTIONS
1 JUNE 1992 - REISSUED, WITHOUT CHANGE, UNDER NEW SIGNATURES
NOV 16, 1992 - CHANGED 6" CURB TO 4"

APPROVED 16 NOV. 1992
DATE

DIRECTOR OF ENGINEERING

DESIGN ENGINEER

NOTE: ORIGINAL APPROVAL DATE WAS DEC. 8 1971

GRANITE SLOPE EDGING
VERTICAL GRANITE CURB
PRECAST REINFORCED CONCRETE CURB
CAST IN PLACE CONCRETE CURB
BITUMINOUS CONCRETE CURB
TREATED TIMBER CURB

VERMONT AGENCY OF TRANSPORTATION

STANDARD
C-1