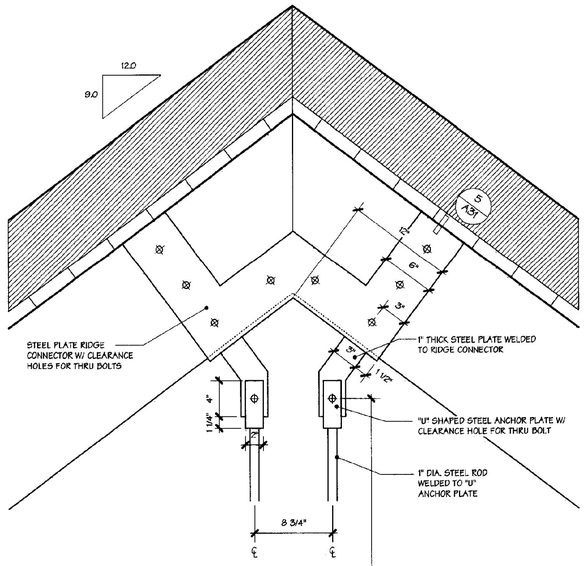

1 STEEL RIDGE CONNECTOR "A"
SEE S8 1 1/2" = 1' - 0"

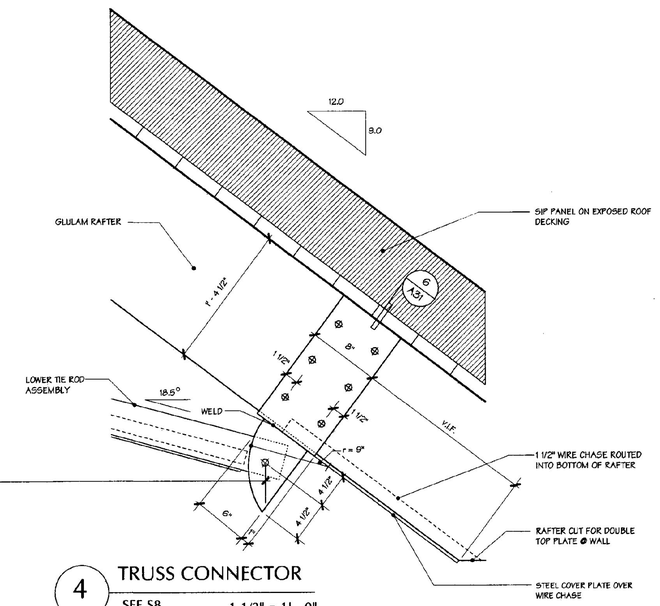

4 TRUSS CONNECTOR
SEE S8 1 1/2" = 1' - 0"

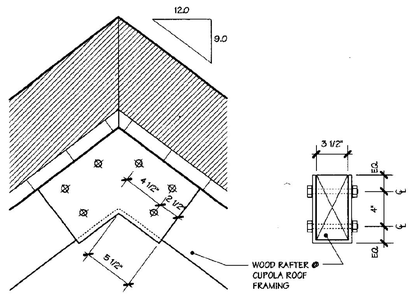

8 STEEL RIDGE "B" (CUPOLA)
NOTE- SMALLER SIZE STEEL RIDGE FOR SMALLER RAFTERS IN MECHANICAL CUPOLA
1 1/2" = 1' - 0"

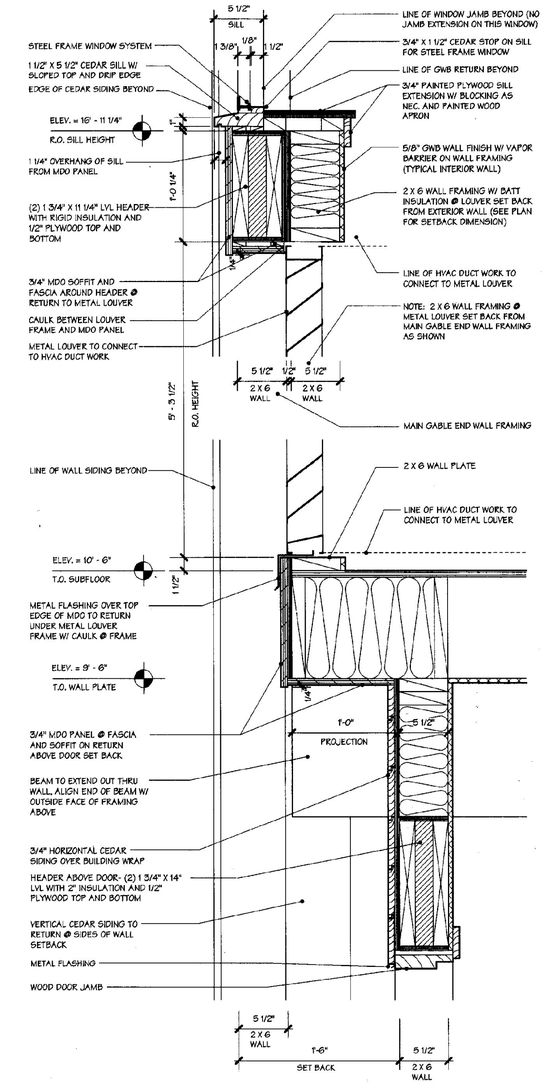

11 SECTION DETAIL @ SERVICE ENTRY
1 1/2" = 1' - 0"

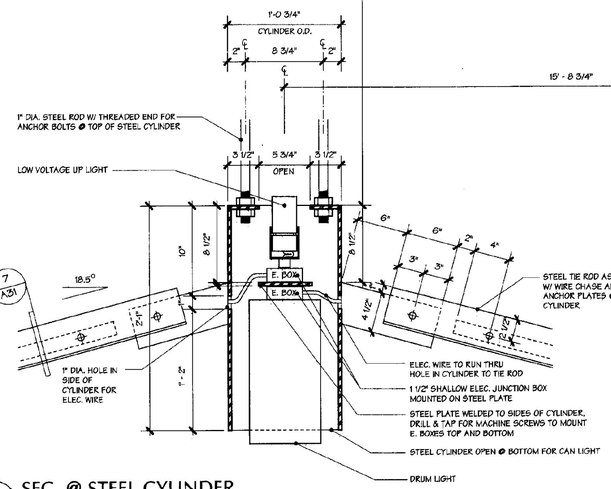

2 SEC. @ STEEL CYLINDER
SEE S8 1 1/2" = 1' - 0"

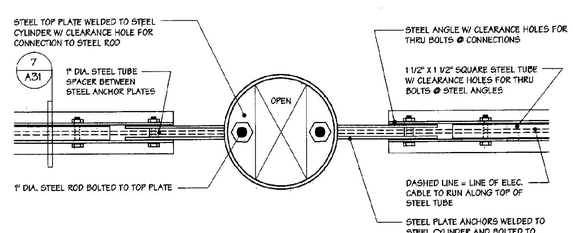

3 PLAN @ STEEL CYLINDER
SEE S8 1 1/2" = 1' - 0"

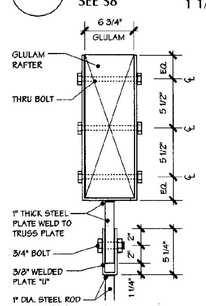

5 UPPER TRUSS JCT.
SEE S8 1 1/2" = 1' - 0"

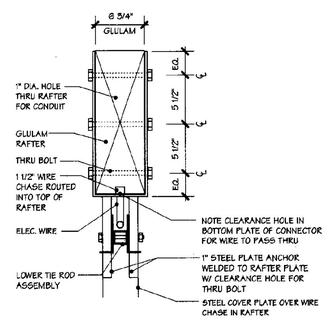

6 LOWER TRUSS JCT.
SEE S8 1 1/2" = 1' - 0"

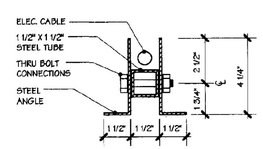

7 LOWER TIE ROD
SEE S8 3" = 1' - 0"

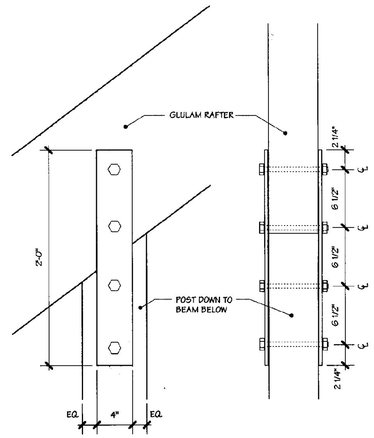

9 RAFTER BRACKET "A"
1 1/2" = 1' - 0"

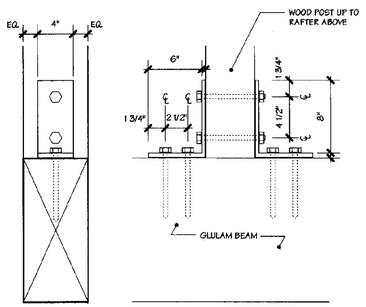

10 RAFTER BRACKET "B"
1 1/2" = 1' - 0"

JANUARY 16, 2001

WILLISTON INFORMATION CENTER I89 Northbound

Project #: IM - BLDG (4)

DUNCAN • WISNIEWSKI ARCHITECTURE ▪
255 SOUTH CHAMPLAIN STREET, BURLINGTON, VERMONT 05401 802.864.6693

A31nb