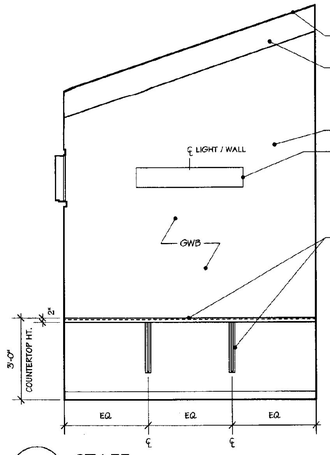

1 STAFF

3/8" = 1' - 0"

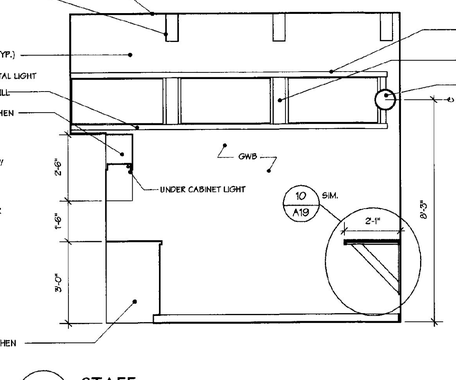

2 STAFF

3/8" = 1' - 0"

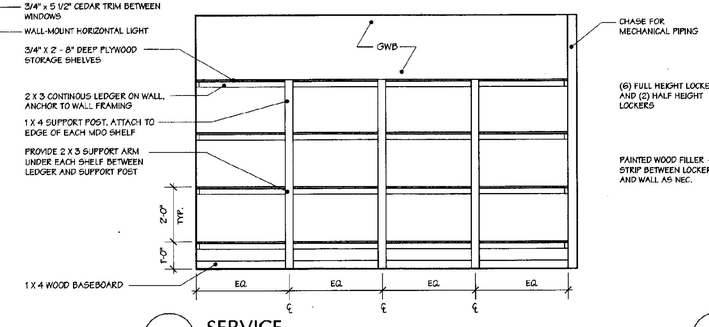

3 SERVICE

3/8" = 1' - 0"

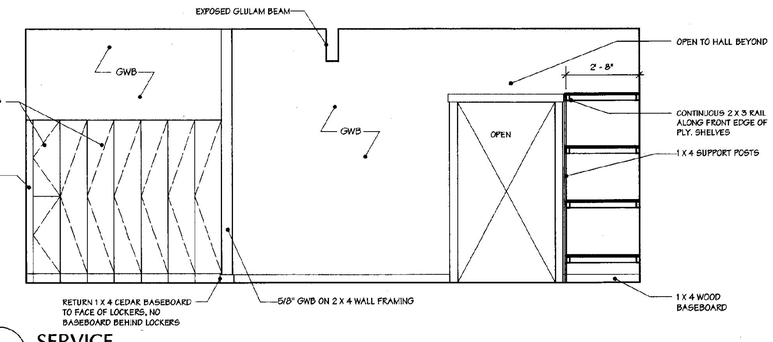

4 SERVICE

3/8" = 1' - 0"

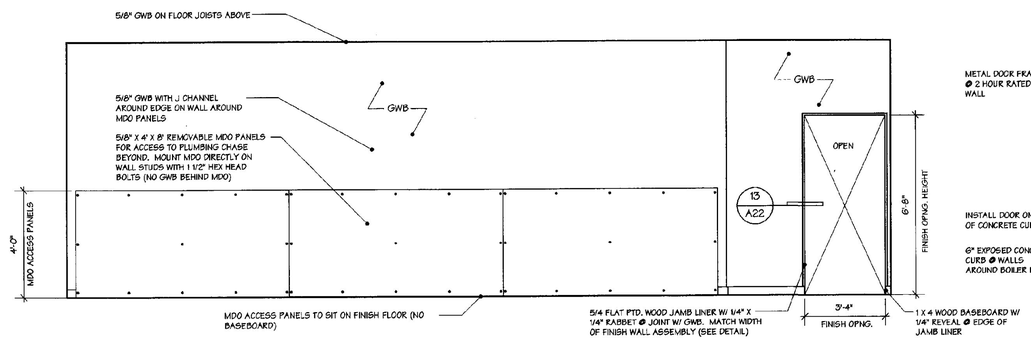

5 HALL 2

3/8" = 1' - 0"

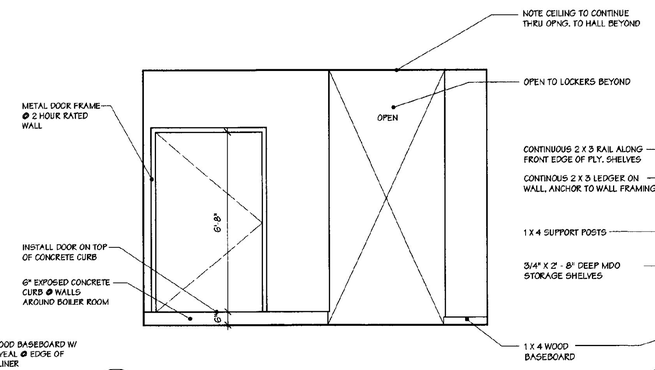

6 SERVICE

3/8" = 1' - 0"

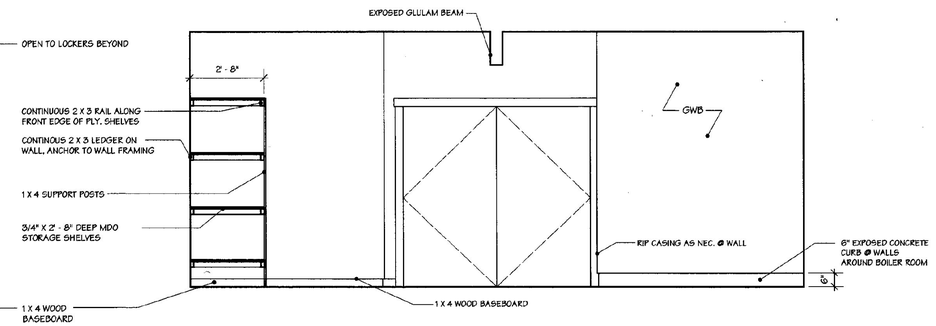

7 SERVICE

3/8" = 1' - 0"

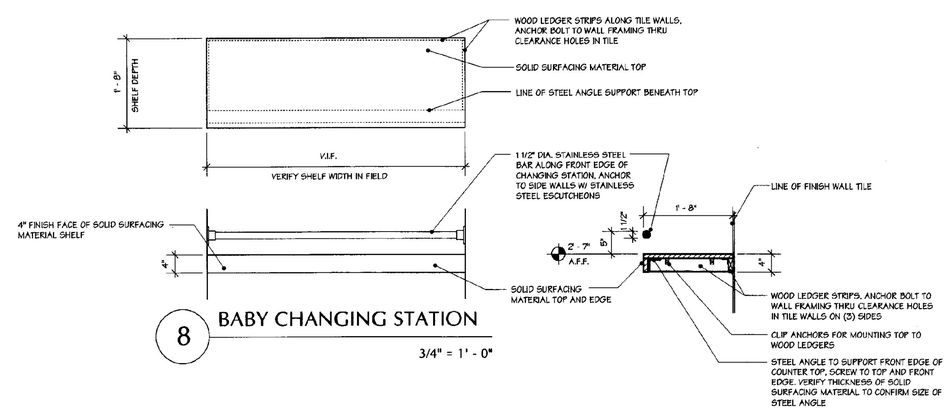

8 BABY CHANGING STATION

3/4" = 1' - 0"

JANUARY 16, 2001

A21nb

WILLISTON INFORMATION CENTER I89 Northbound

Project #: IM - BLDG (4)

DUNCAN • WISNIEWSKI ARCHITECTURE ▪
255 SOUTH CHAMPLAIN STREET, BURLINGTON, VERMONT 05401 802.864.6693