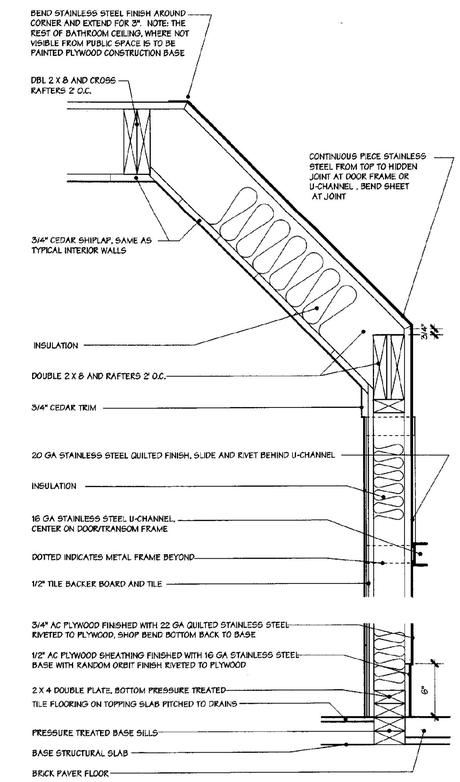

5 WALL SECTION @ ENTRY W.C.
1 1/2" = 1' - 0"

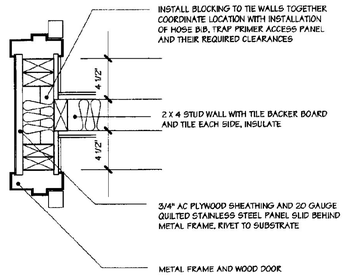

6 PLAN DETAIL @ DOORS
1 1/2" = 1' - 0"

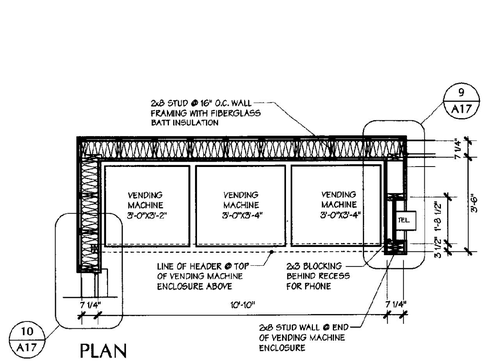

PLAN

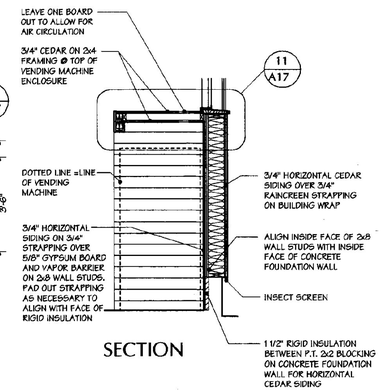

SECTION

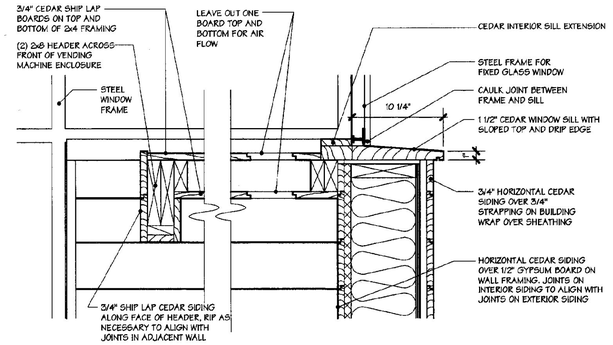

11 SECTION DETAIL
1 1/2" = 1' - 0"

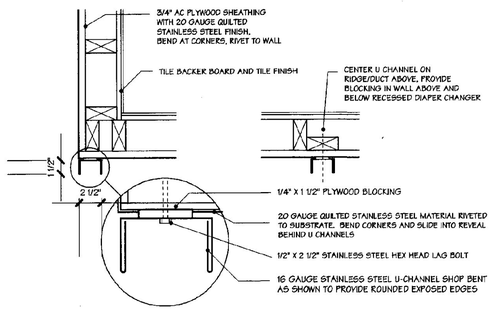

7 PLAN DETAILS - CORNER/RIDGE
1 1/2" = 1' - 0"

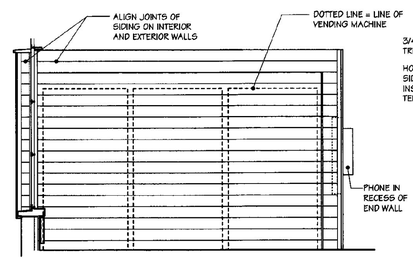

FRONT ELEVATION

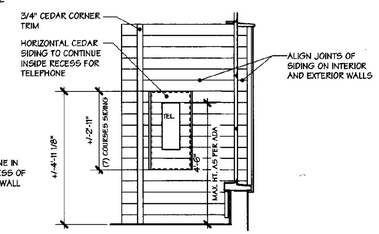

SIDE ELEVATION

8 VENDING ENCLOSURE
3/8" = 1' - 0"

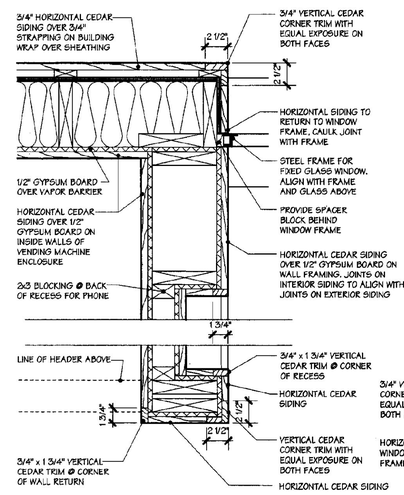

9 PLAN DETAIL
1 1/2" = 1' - 0"

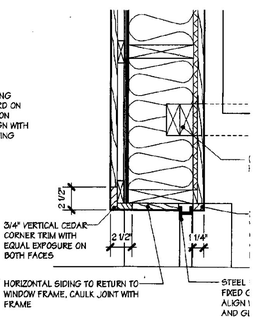

10 PLAN DETAIL
1 1/2" = 1' - 0"

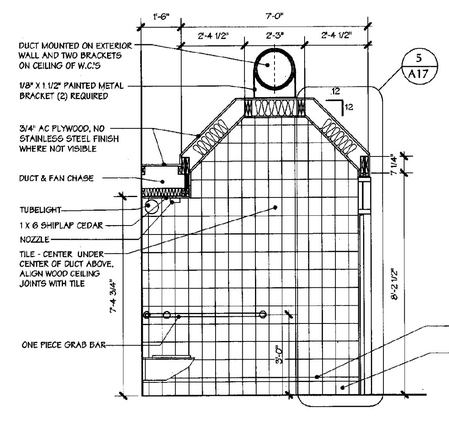

1 W.C. SECTION LOOKING @ INT WALL
3/8" = 1' - 0"
WC2 Opposite View

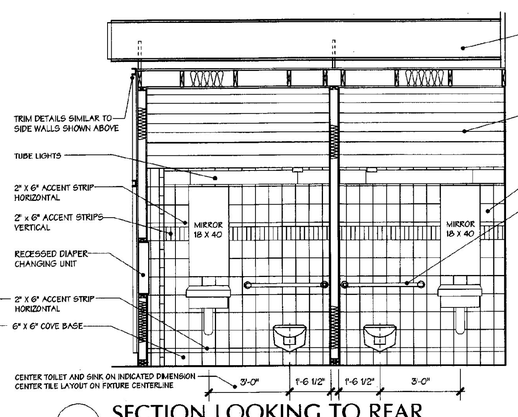

2 SECTION LOOKING TO REAR
3/8" = 1' - 0"

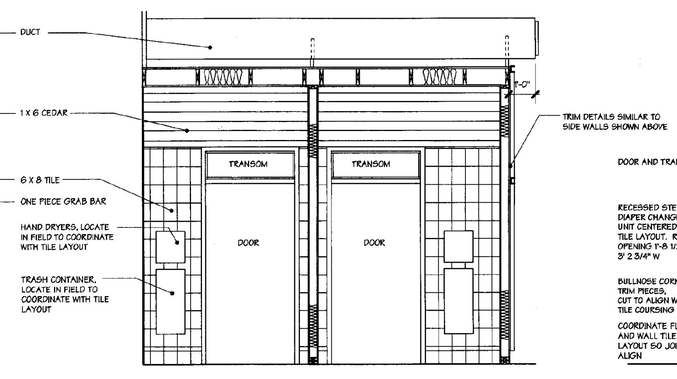

3 SECTION LOOKING @ DOORS
3/8" = 1' - 0"

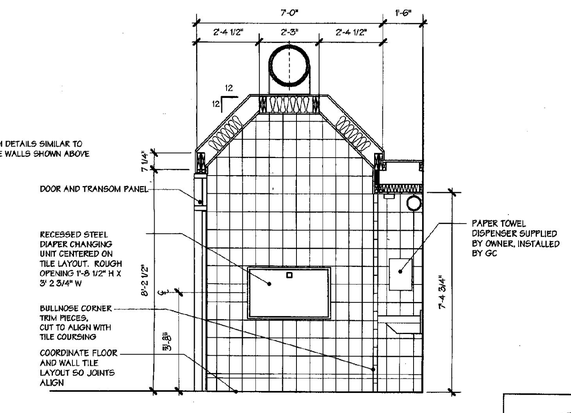

4 SECTION LOOKING @ EXT WALL
3/8" = 1' - 0"
WC2 Opposite View

REGISTERED ARCHITECT MICHAEL WISNIEWSKI No. 1208 STATE OF VERMONT

JANUARY 16, 2001

WILLISTON INFORMATION CENTER I89 Northbound

Project #: IM - BLDG (4)

DUNCAN • WISNIEWSKI ARCHITECTURE ▪
255 SOUTH CHAMPLAIN STREET, BURLINGTON, VERMONT 05401 802.864.6693

A17nb