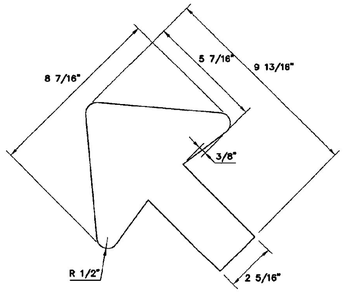

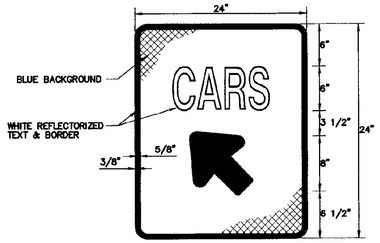

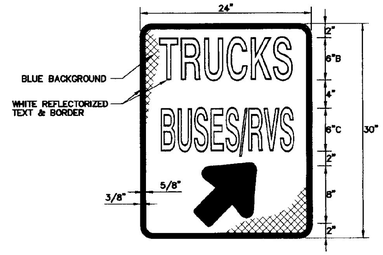

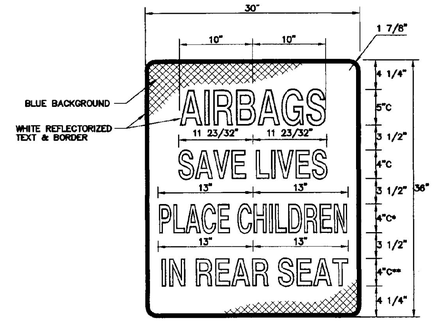

* REDUCE SPACING BY 24%
** REDUCE SPACING BY 14%

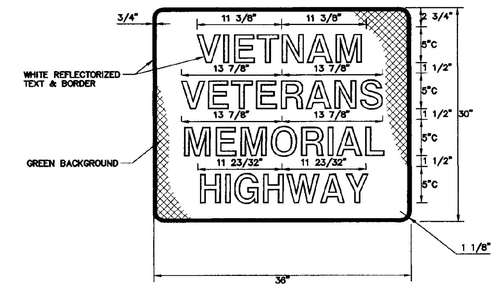

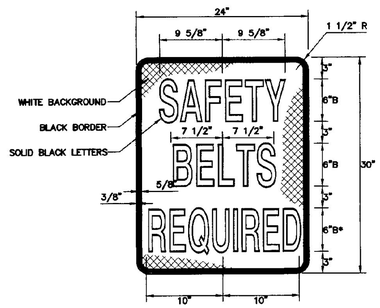

* REDUCE SPACING BY 22%

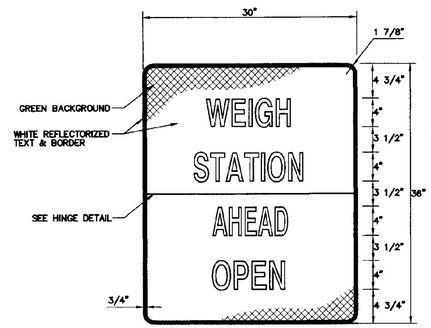

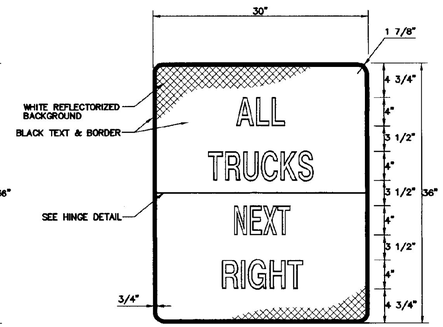

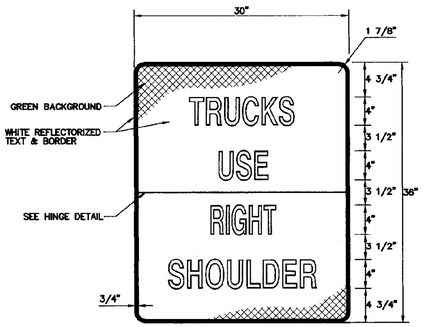

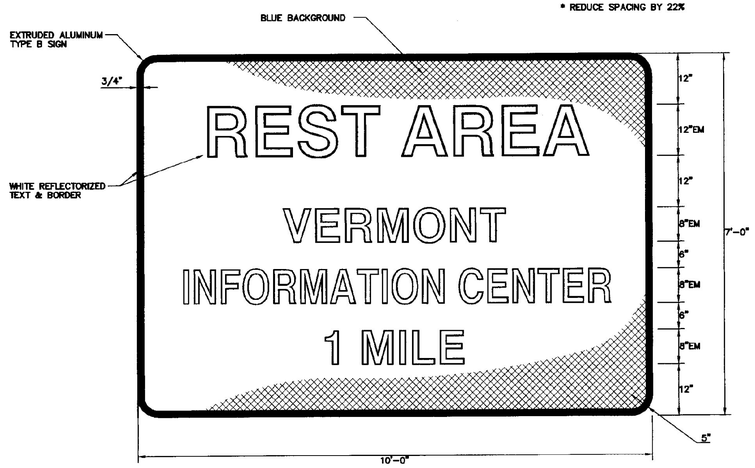

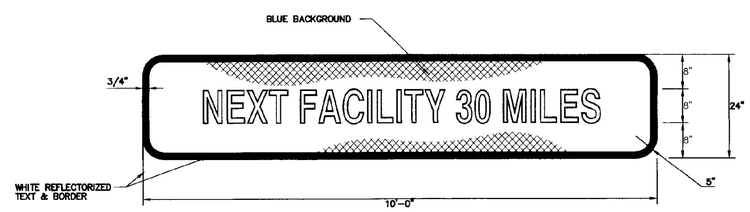

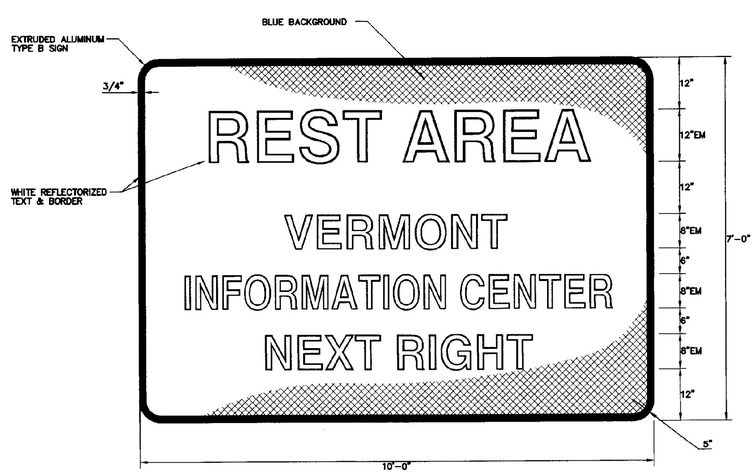

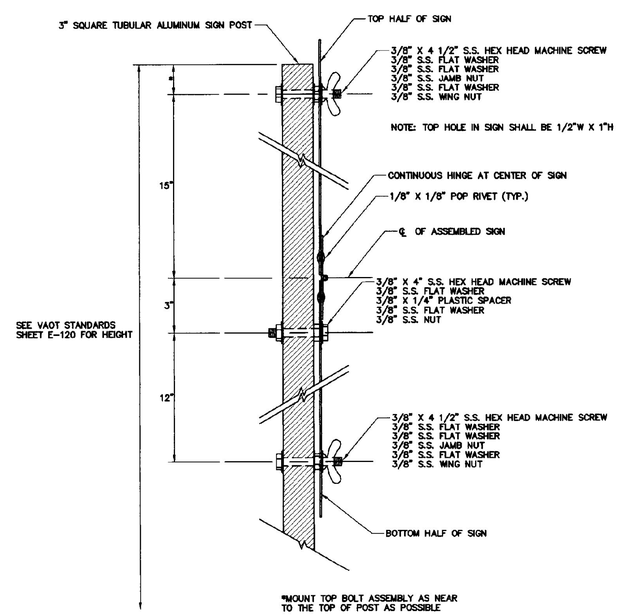

*MOUNT TOP BOLT ASSEMBLY AS NEAR TO THE TOP OF POST AS POSSIBLE

MATERIALS:

THE SIGN BASE MATERIAL MAY BE ANY OF THE FOLLOWING, WITH THE MINIMUM THICKNESSES NOTED:

FLAT SHEET ALUMINUM	
LESS THAN 24" X 24"	0.060"
WHEN USED ON GUIDE SIGNS	0.080"
24" X 24", 30" X 24"	0.080"
36" X 36", 45" X 36"	0.100"
GALVANIZED FLAT SHEET STEEL	
LESS THAN 24" X 24"	18 GAGE
WHEN USED ON GUIDE SIGNS	18 GAGE
24" X 24", 30" X 24"	16 GAGE
36" X 36", 45" X 36"	14 GAGE

THE REFLECTIVE MATERIAL SHALL BE WHITE REFLECTIVE SHEETING APPLIED TO THE ENTIRE BACKGROUND. THE TEXTS MAY BE LETTERING FILM, SILK SCREENED OR HAND PAINTED.

COLORS:

REFLECTORIZED WHITE TEXT ON REFLECTORIZED GREEN OR BLUE BACKGROUND AS INDICATED. THE GREEN AND BLUE SHALL CONFORM TO THOSE FOUND IN STANDARD COLOR TOLERANCE CHARTS AS PROVIDED BY THE USDOT AND THE FHA.

LETTERING:

LETTERS AND DIGITS SHALL CONFORM TO THE REQUIREMENTS FOUND IN THE PUBLICCATION "STANDARD ALPHABETS FOR HIGHWAY SIGNS AND PAVEMENT MARKINGS" PRINTED BY THE FHA.

DESIGNS:

THE DESIGN OF THESE SIGNS SHALL CONFORM THE DETAILS SET FORTH IN THE MANUAL "STANDARD HIGHWAY SIGNS" AS SPECIFIED IN "THE MANUAL ON UNIFORM TRAFFIC CONTROL DEVICES".

SPECIFICATIONS:

THE SIGNS SHALL MEET THE STANDARD SPECIFICATIONS FOR "TRAFFIC SIGNS".

POSTS:

FINAL POST LENGTHS ARE TO BE DETERMINED IN THE FIELD. POST SIZES ARE BASED UPON INFORMATION FURNISHED ON THE STANDARD SHEETS: HOWEVER WHEN DEALING WITH W-SHAPE STEEL POSTS (STD. E-161), CONSULT THE TRAFFIC DESIGN SECTION, VAOT.

REVISIONS	BY

COPYRIGHT © 2001
CHAMPLAIN CONSULTING ENGINEERS
ALL RIGHTS RESERVED

CHAMPLAIN CONSULTING ENGINEERS
85 PRIM ROAD, P.O. BOX 453
COLCHESTER, VERMONT 05446
(802) 863-8060
(802) 864-1878 FAX

STATE OF VERMONT
PAUL DUCHESNEAU
No. 3567
REGISTERED PROFESSIONAL ENGINEER

INTERSTATE 89 NORTHBOUND
WILLISTON INFORMATION CENTER
SIGN DETAILS

WILLISTON VERMONT

PROJECT # IM-BLDG(4)

DRAWN	CCE
CHECKED	PD
SCALE	NONE
DATE	01/16/01
JOB NO.	93114
SHEET	C15nb

OF 22 SHEETS

CCT/MCC Tec C:\SCS 93114-M2B93\93114-M2B15.dwg Plotted:2001-01-16 10:14:29