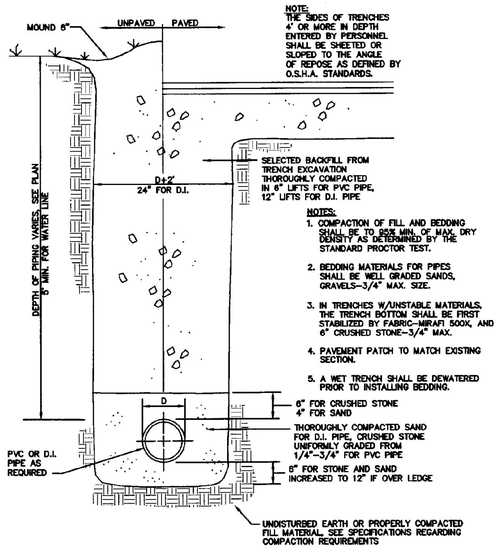

1 TYPICAL EXCAVATION TRENCH DETAIL
N.T.S.

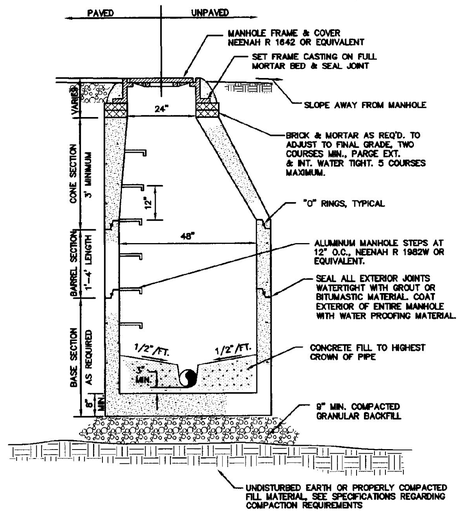

MANHOLE NOTES:
1. FORM INVERT TO SAME RADIUS AS LARGEST PIPE LEAVING MANHOLE ALL INVERTS TO BE SMOOTH & TRANSITIONS. NO SHARP BENDS ALLOWED.
2. INLET & OUTLET PIPES SHALL BE JOINED TO THE MANHOLE WITH A GASKETED FLEXIBLE WATERTIGHT CONNECTION OR ANY WATERTIGHT CONNECTION ARRANGEMENT THAT ALLOWS DIFFERENTIAL SETTLEMENT OF PIPE AND MANHOLE TO OCCUR.

2 TYPICAL PRE-CAST CONCRETE MANHOLE
N.T.S.

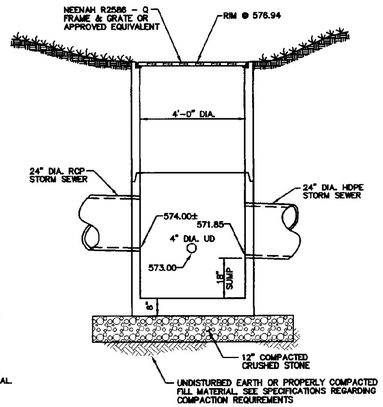

3 CATCH BASIN #1
N.T.S.

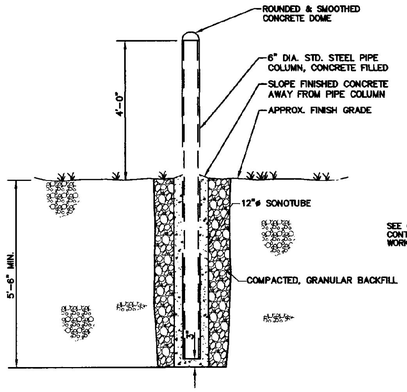

4 EXTERIOR BOLLARD
N.T.S.

NOTES:
1. COMPACTION OF BACKFILL AND BEDDING SHALL BE A MINIMUM OF 90% (95% UNDER ROADWAY SURFACES) OF MAXIMUM DRY DENSITY DETERMINED IN THE STANDARD PROCTOR TEST (ASTM D698).
2. BEDDING MATERIAL SHALL NOT BE PLACED ON FROZEN SUBGRADE.
3. APPROVED BACKFILL SHALL NOT CONTAIN ANY STONES MORE THAN 1" IN LARGEST DIMENSION, REDUCED TO 6" UNDER ROADWAYS, OR CONTAIN ANY FROZEN WET OR ORGANIC MATERIAL.
4. TRENCHES SHALL BE COMPLETELY DEWATERED PRIOR TO PLACING OF PIPE BEDDING MATERIAL AND KEPT DEWATERED DURING INSTALLATION OF PIPE AND BACKFILL.
5. IN TRENCHES WITH UNSTABLE MATERIALS, TRENCH BOTTOM SHALL FIRST BE STABILIZED BY PLACEMENT OF FILTER FABRIC THEN CRUSHED STONE (3/4" MAXIMUM).
6. THE SIDES OF TRENCHES 4' OR MORE IN DEPTH ENTERED BY PERSONNEL SHALL BE SHEETED OR SLOPED TO THE ANGLE OF REPOSE AS DEFINED BY O.S.H.A. STANDARDS.
7. BEDDING MATERIAL SHALL CONSIST OF CRUSHED STONE, GRAVEL OR SAND WITH A MAXIMUM SIZE OF 3/4". SUBMIT A SAMPLE TO THE ENGINEER FOR APPROVAL.

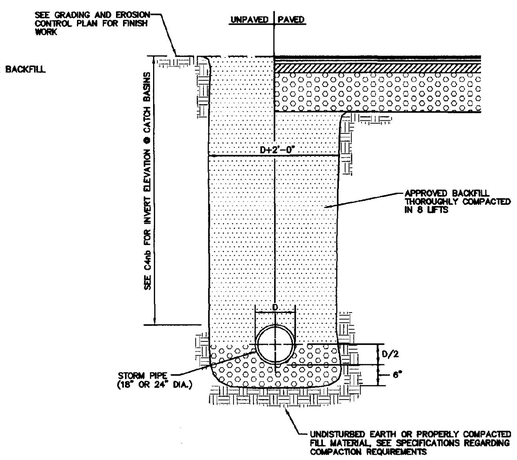

5 STORM DRAINAGE TYPICAL TRENCH
N.T.S.

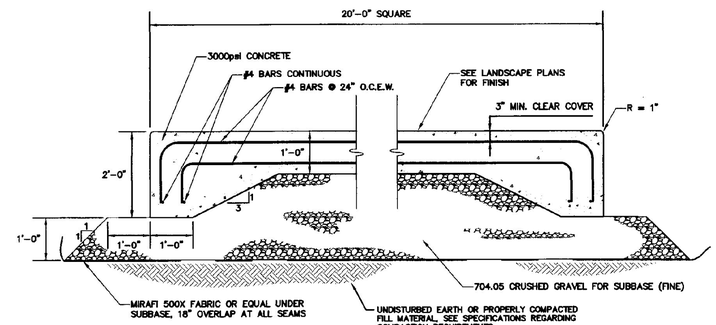

6 SCULPTURE PAD SECTION
N.T.S.

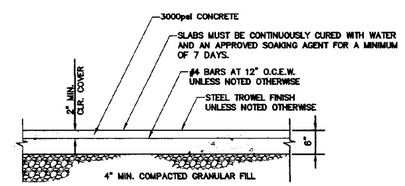

7 TYPICAL SLAB-ON GRADE
N.T.S.

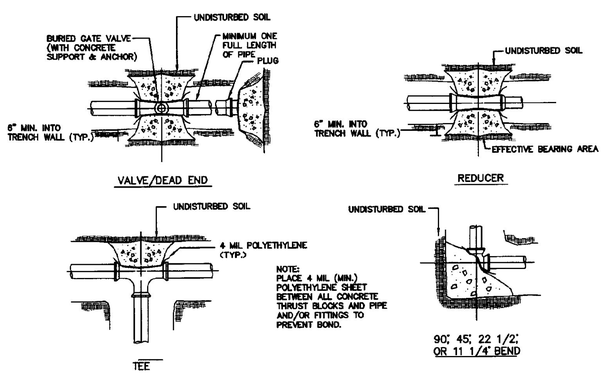

8 THRUST BLOCK DETAILS
N.T.S.

MINIMUM AREA OF BEARING SURFACE OF CONC. THRUST BLOCKS (in square feet)

3"				4"				6"				8"				12"					
ENDS & TEES	90° ELB.	45° ELB.	22.5° ELB. OR LESS	ENDS & TEES	90° ELB.	45° ELB.	22.5° ELB. OR LESS	ENDS & TEES	90° ELB.	45° ELB.	22.5° ELB. OR LESS	ENDS & TEES	90° ELB.	45° ELB.	22.5° ELB. OR LESS	ENDS & TEES	90° ELB.	45° ELB.	22.5° ELB. OR LESS	SOIL CONDITION	SAFE BEARING LOAD (P.S.F.)
0.5	0.5	0.5	0.5	0.5	1.0	0.5	0.5	1.0	1.5	1.0	0.5	2.0	2.5	1.5	1.0	4.0	5.5	3.0	1.5	SOUND SHALE	10,000
1.0	1.0	1.0	0.5	1.5	2.0	1.0	0.5	3.0	4.0	2.0	1.0	4.5	6.5	3.5	2.0	10.0	14.0	7.5	4.0	DENSE SAND AND GRAVEL	4,000
1.0	1.5	1.0	0.5	2.0	2.5	1.5	1.0	3.5	5.0	3.0	1.5	6.0	8.5	5.0	2.5	13.0	18.5	10.0	5.0	HARD CLAY AND VERY DENSE SAND	3,000
1.5	2.5	1.5	1.0	2.5	3.5	2.0	1.0	5.5	7.5	4.0	2.0	9.0	13.0	7.0	3.5	20.0	27.5	15.0	8.0	MEDIUM STIFF CLAY AND MEDIUM DENSE SAND	2,000
3.0	4.5	2.5	1.5	5.0	7.0	4.0	2.0	10.5	15.0	8.0	4.0	18.0	25.0	14.0	7.0	39.0	55.0	30.0	15.0	SOFT CLAY	1,000
MAXIMUM WATER PRESSURE = 300 P.S.I. NOTE: REDUCER BEARING AREA = 45 BEND, LARGER PIPE																					

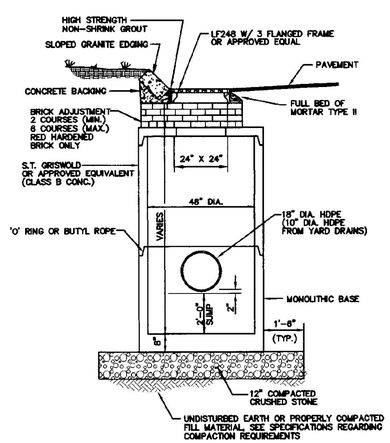

9 TYPICAL CATCH BASIN @ SLOPED CURB
N.T.S.

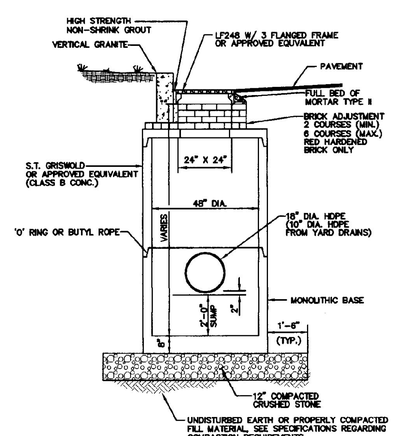

10 TYPICAL CATCH BASIN @ VERTICAL CURB
N.T.S.

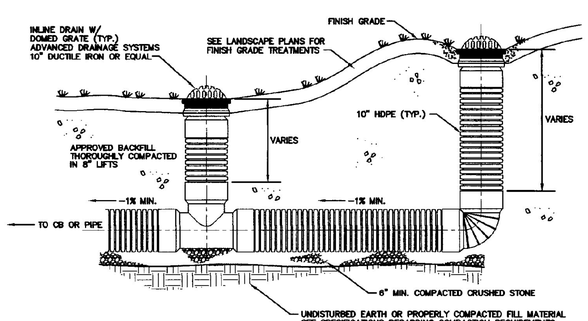

11 TYPICAL YARD DRAIN
N.T.S.

REVISIONS	BY

COPYRIGHT © 2001
CHAMPLAIN CONSULTING ENGINEERS
ALL RIGHTS RESERVED

CHAMPLAIN CONSULTING ENGINEERS
85 PRIM ROAD, P.O. BOX 453
COLCHESTER, VERMONT 05446
(802) 863-8060
(802) 864-1878 FAX

STATE OF VERMONT
PAUL DUCHESNEAU
No. 3567
PROFESSIONAL ENGINEER

INTERSTATE 89 NORTHBOUND
WILLISTON INFORMATION CENTER
DETAILS
WILLISTON VERMONT
PROJECT # IM-BLDG(4)

DRAWN	CCE
CHECKED	PD
SCALE	AS NOTED
DATE	01/16/01
JOB NO.	93114
SHEET	C12nb
OF	22 SHEETS

CST/MAC Tue C:\CE: \93114-NB\93114-NB12.dwg Plotted 2001-01-16 09:54:45