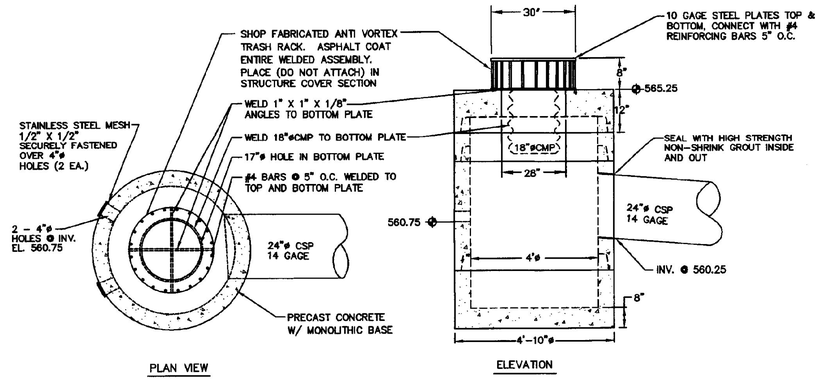

1 POND OUTLET STRUCTURE
N.T.S.

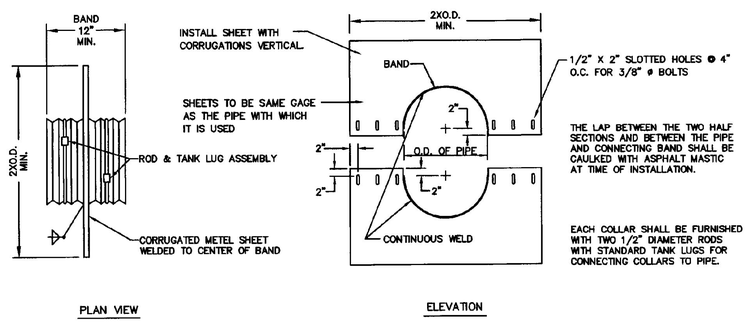

2 ANTI - SEEP COLLAR (2 EACH)
N.T.S.

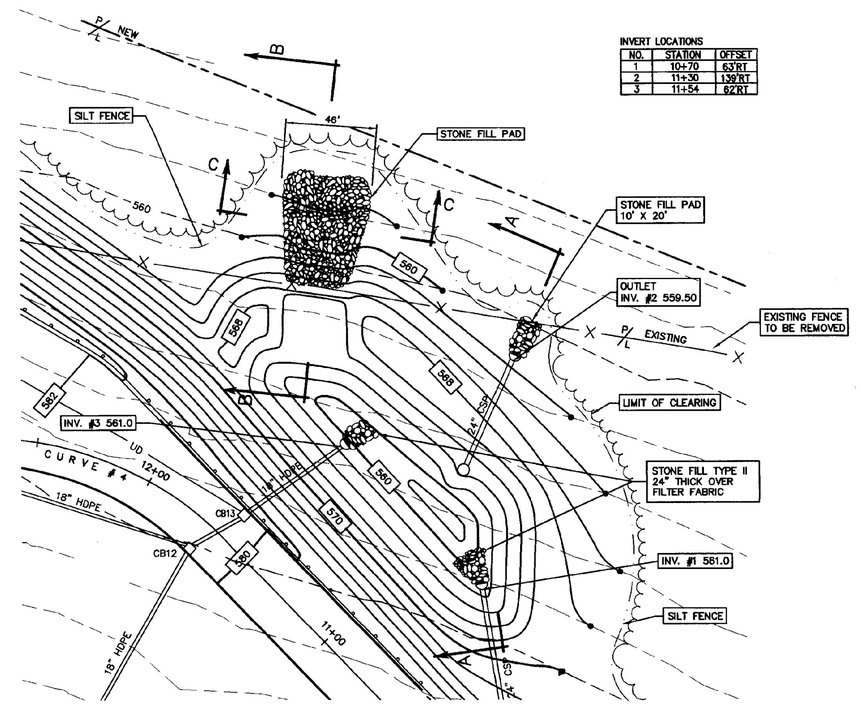

3 SEDIMENT BASIN PLAN
SCALE: 1" = 30'

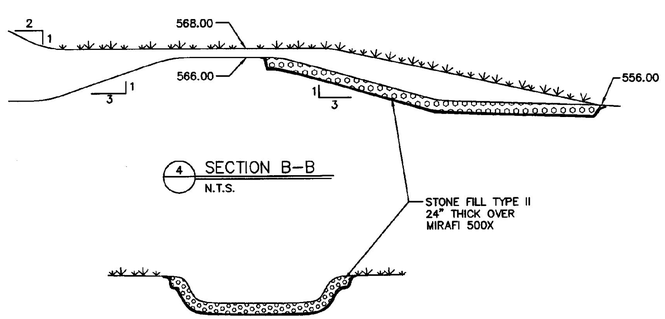

4 SECTION B-B
N.T.S.

5 SECTION C-C
N.T.S.

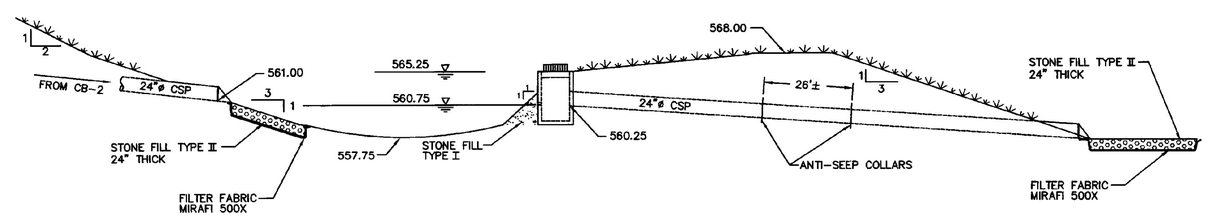

6 SECTION A-A
N.T.S.

REVISIONS	BY

COPYRIGHT © 2001
CHAMPLAIN CONSULTING ENGINEERS
ALL RIGHTS RESERVED

CHAMPLAIN CONSULTING ENGINEERS
85 PRIM ROAD, P.O. BOX 453
COLCHESTER, VERMONT 05446
(802) 863-8060
(802) 864-1876 FAX

STATE OF VERMONT PAUL DUCHESNEAU No. 356 REGISTERED PROFESSIONAL ENGINEER

INTERSTATE 89 NORTHBOUND
WILLISTON INFORMATION CENTER
SEDIMENT BASIN PLAN & DETAILS
WILLISTON VERMONT
PROJECT # IM-BLDG(4)

DRAWN	CCE
CHECKED	PD
SCALE	AS NOTED
DATE	01/16/01
JOB NO.	93114
SHEET	C11nb

OF 22 SHEETS

CCE/ALC File C:\SO: *\93114-NBIT.dwg Plotted 2001-01-16 09:28:44