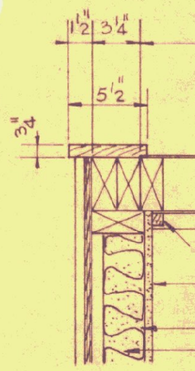

1

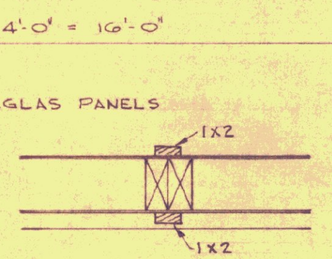

2

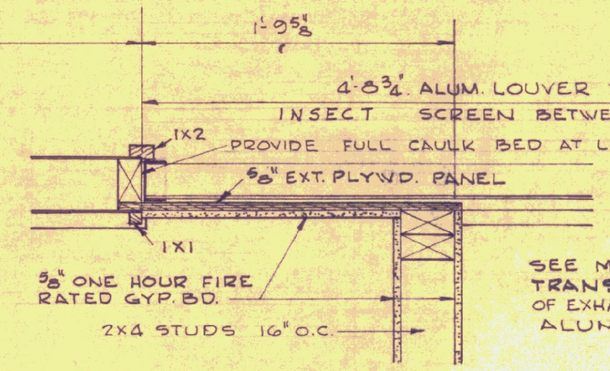

3

SEE MECH DWGS. FOR TRANSITION CONNECTION OF EXHAUST DUCT TO ALUM. LOUVER

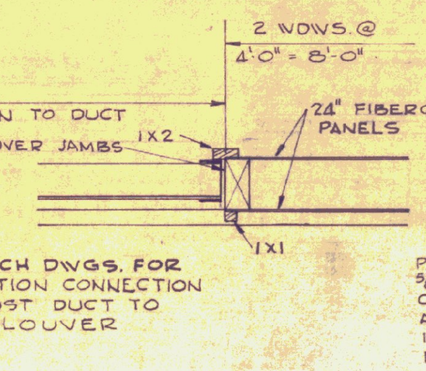

4

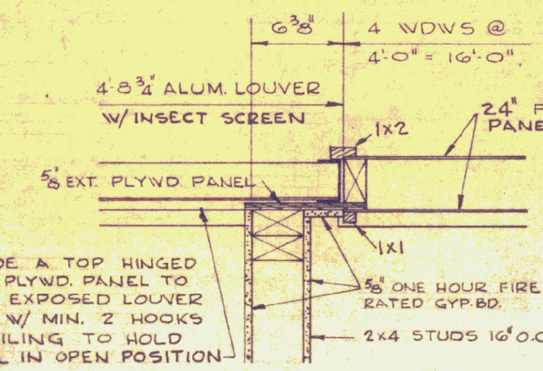

PROVIDE A TOP HINGED 5/8" EXT. PLYWD. PANEL TO COVER EXPOSED LOUVER AREA W/ MIN. 2 HOOKS IN CEILING TO HOLD PANEL IN OPEN POSITION

5

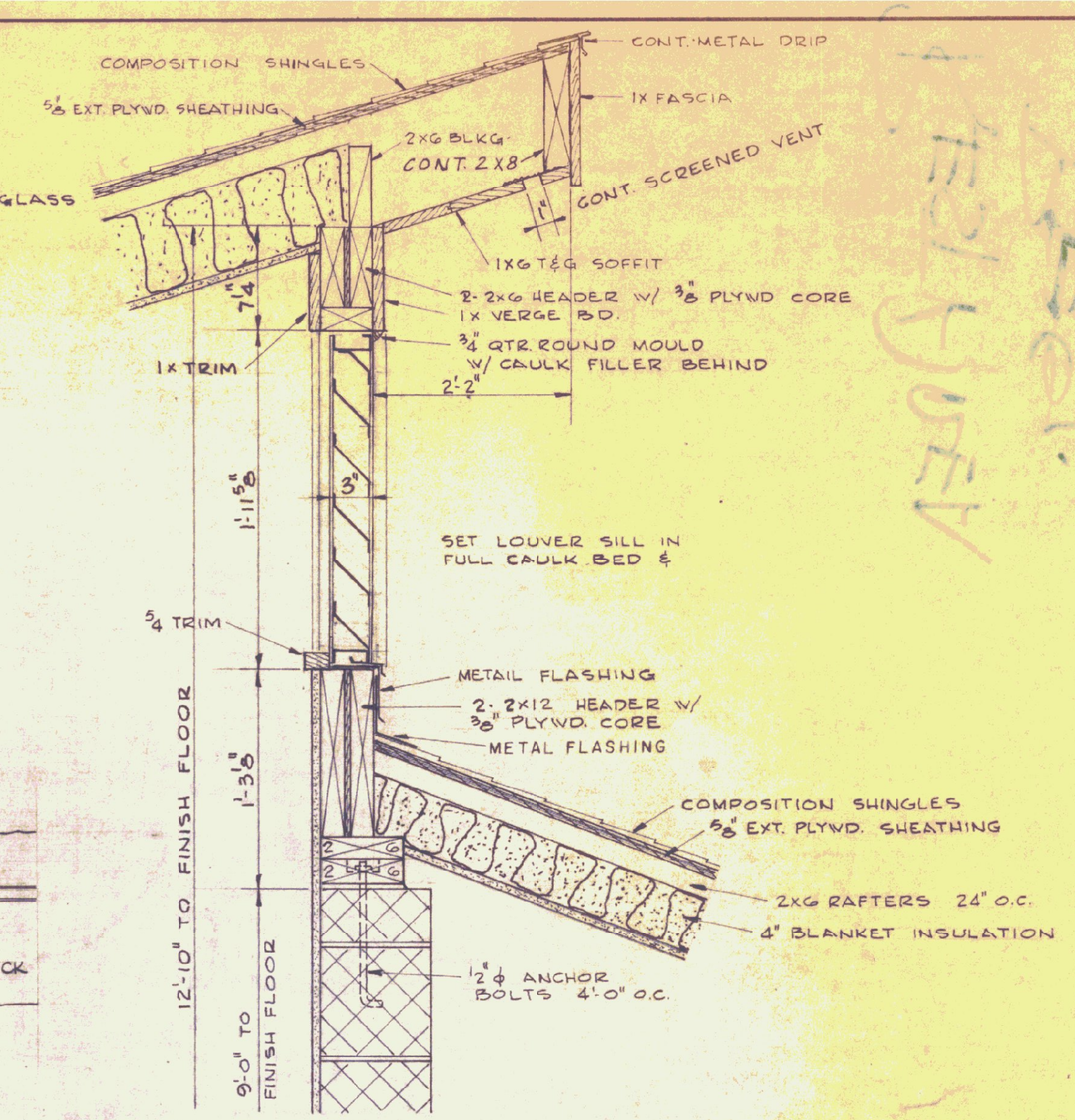

FOR NOTES & DIMENSIONS NOT SHOWN, SEE SECT. "F-F" DWG. NO. 6

10

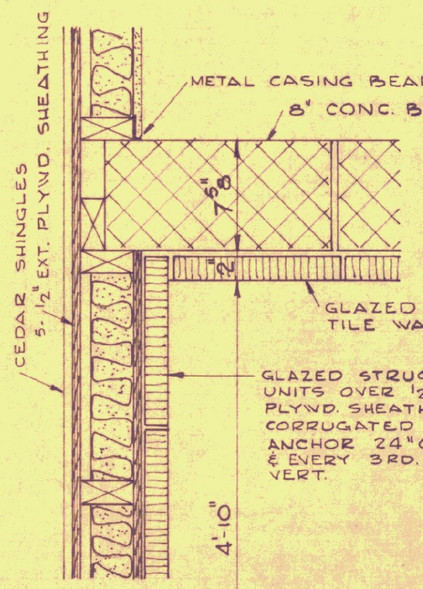

6

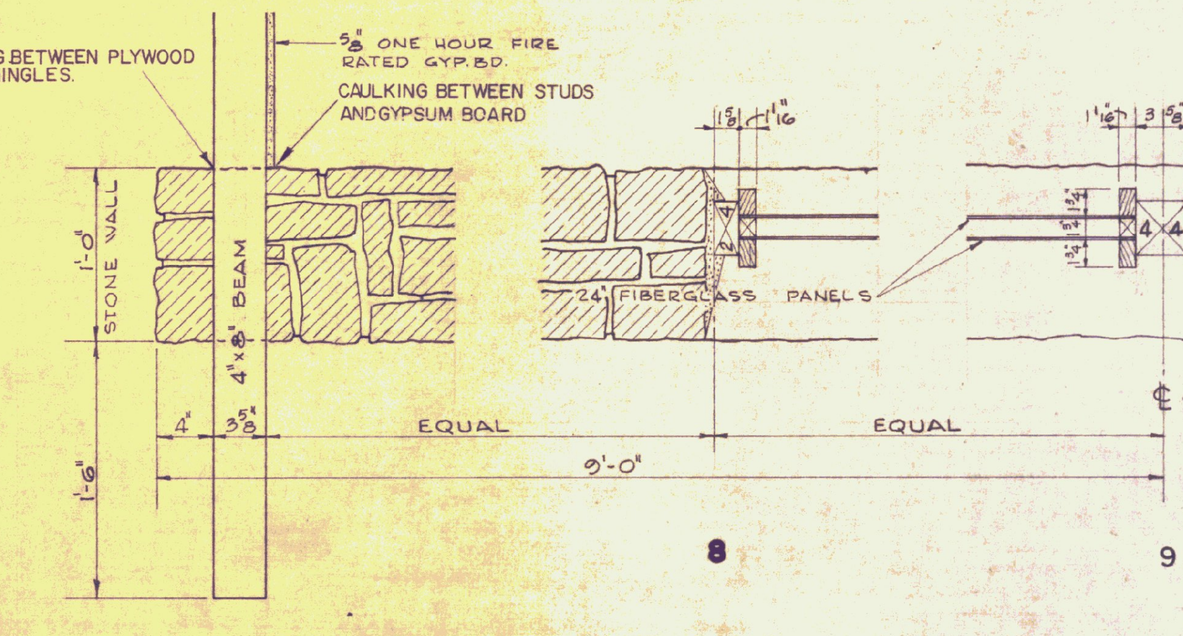

8 9

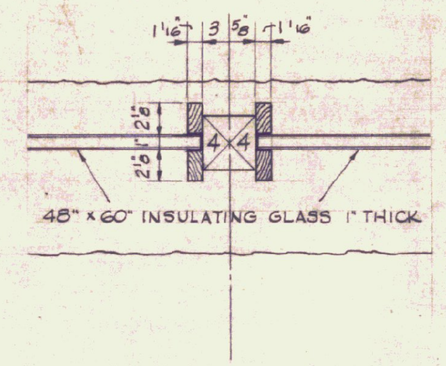

7

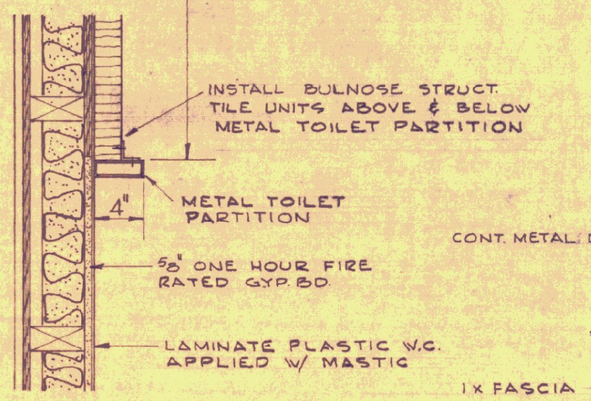

11

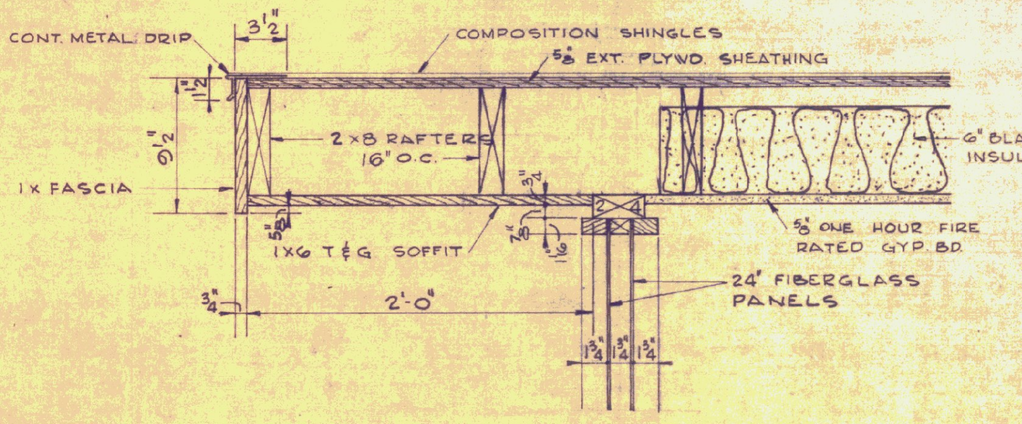

13

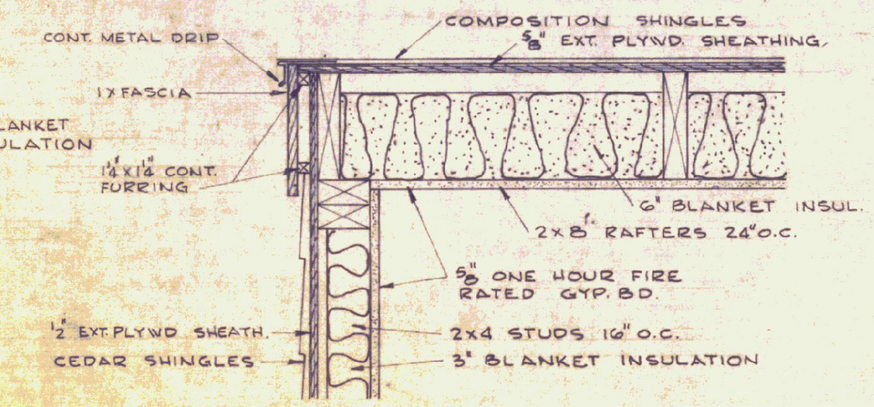

15

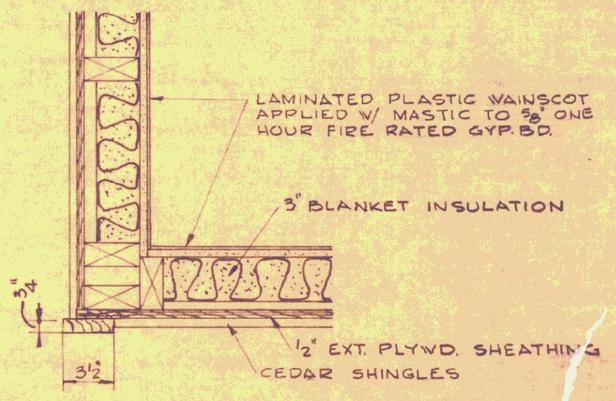

12

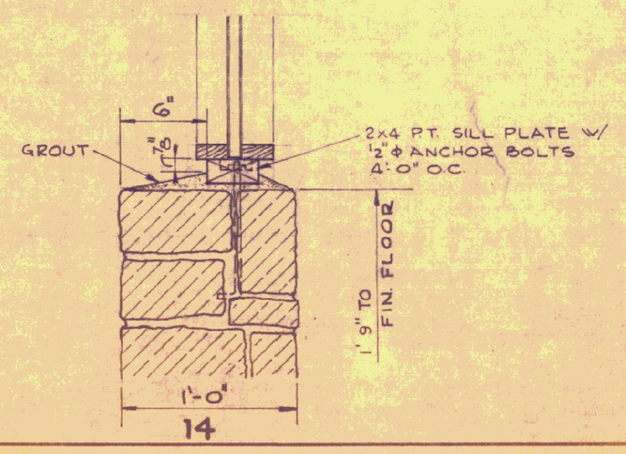

14

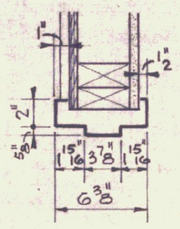

16

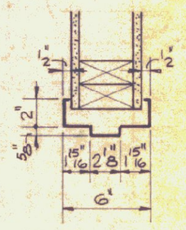

17

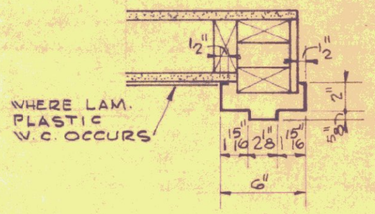

18

ROADSIDE REST FACILITIES

SECTIONS AND DETAILS

STATE OF VERMONT
DEPARTMENT OF HIGHWAYS

PROJECT Nº

SCALE: 1 1/2" = 1'-0"

SHEET OF

7