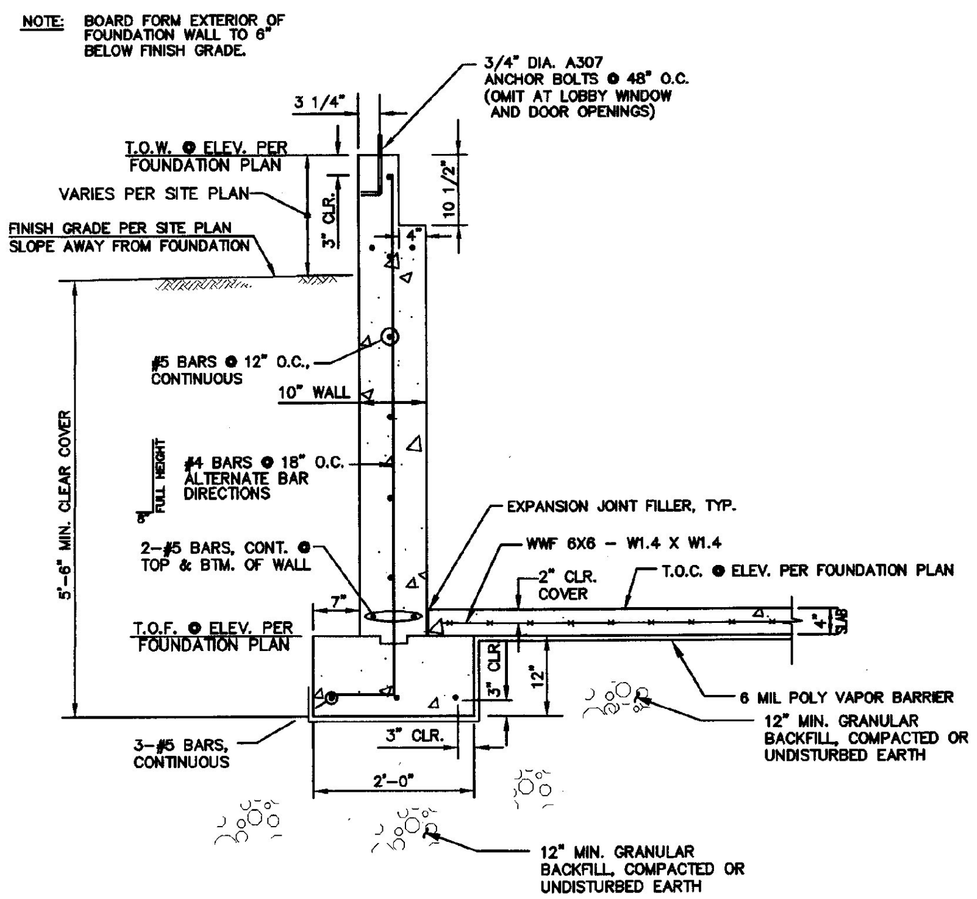

1 S-2 FOUNDATION WALL DETAIL
3/4" = 1'-0"

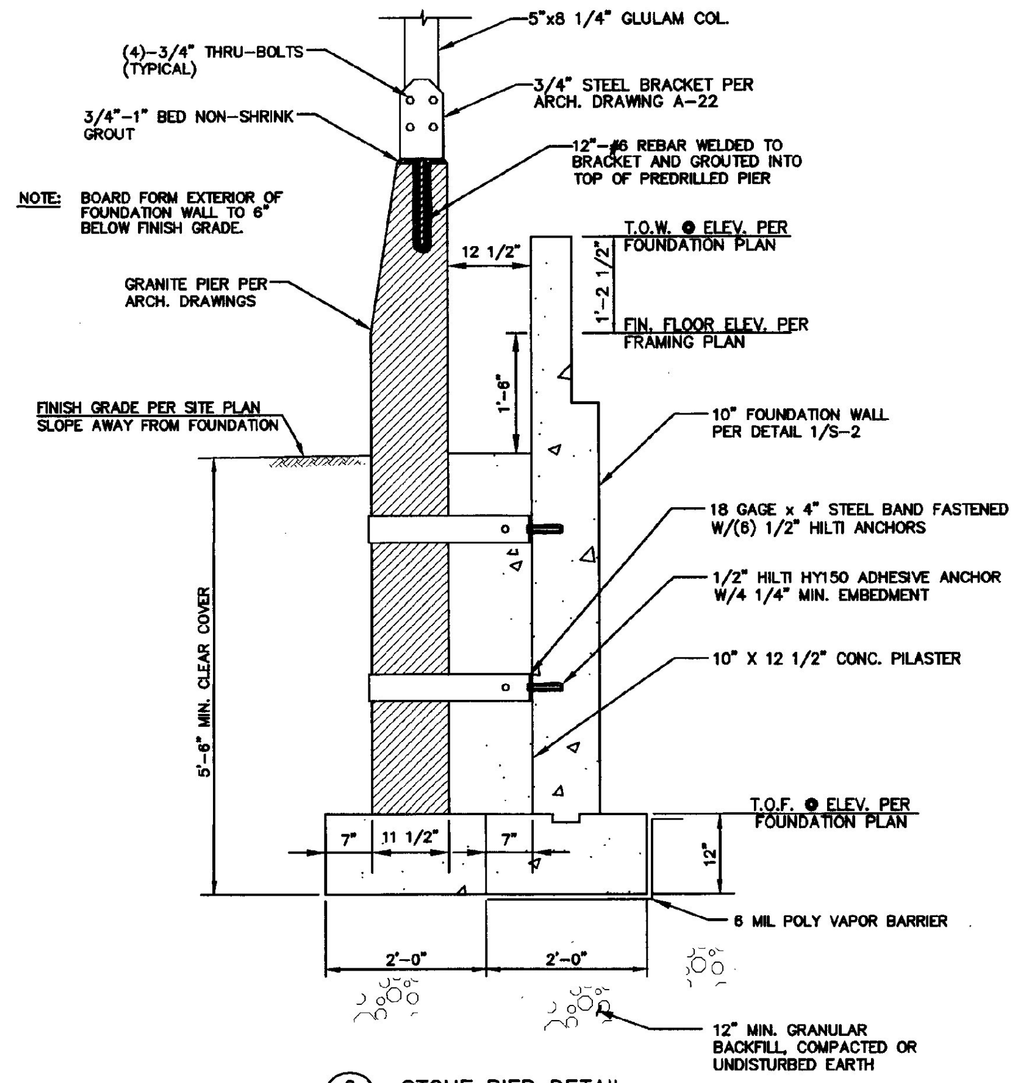

2 S-2 STONE PIER DETAIL
3/4" = 1'-0"

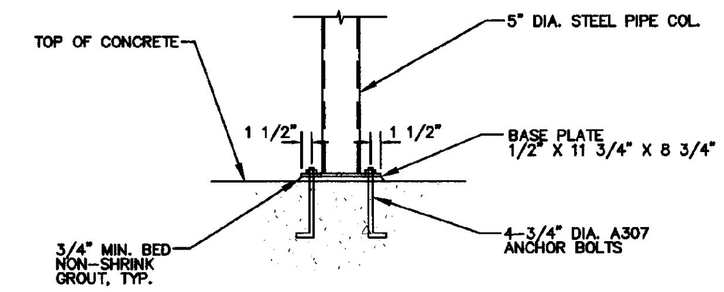

3 S-2 BASE PLATE DETAIL
3/4" = 1'-0"

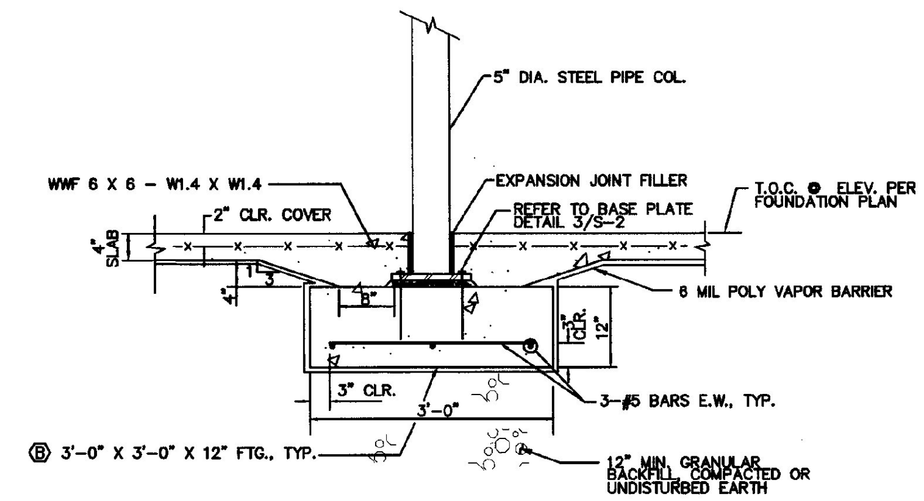

4 S-2 INTERIOR FOOTING & POST DETAIL
3/4" = 1'-0"

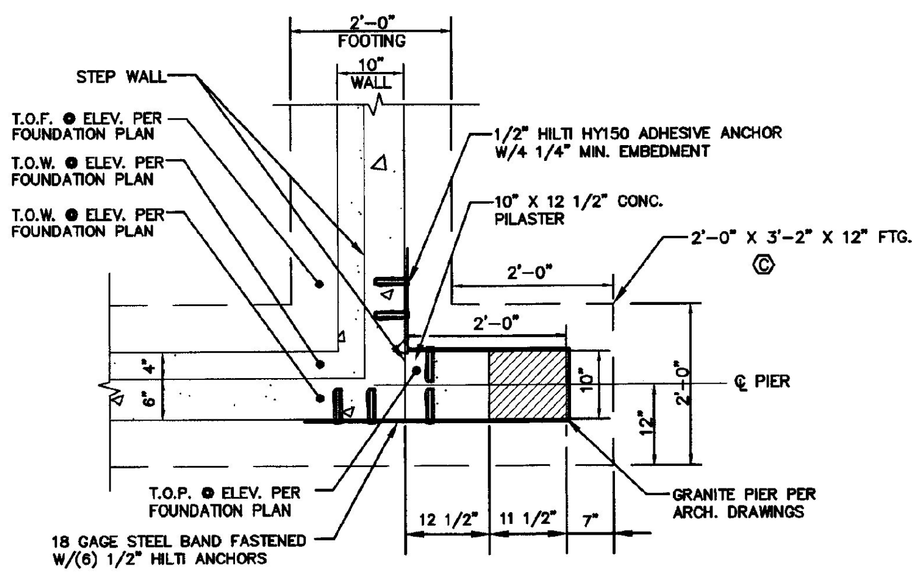

5 S-2 CORNER PIER DETAIL
SCALE: 3/4" = 1'-0"

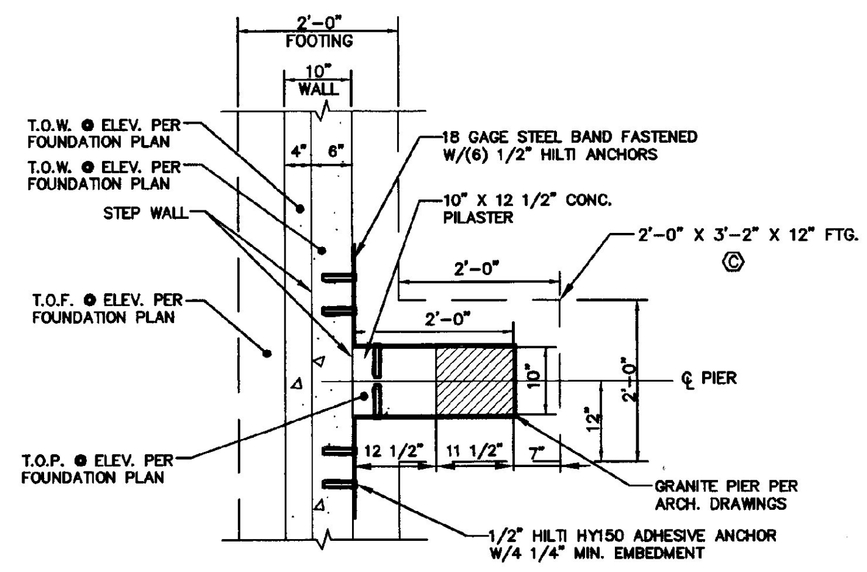

6 S-2 ENDWALL PIER DETAIL
SCALE: 3/4" = 1'-0"

GRANULAR BACKFILL:

GRANULAR BACKFILL SHALL CONSIST OF FREE-DRAINING GRANULAR MATERIAL SATISFACTORILY GRADED, REASONABLY FREE FROM LOAM, SILT, CLAY AND ORGANIC MATERIALS AND MEETING THE FOLLOWING CRITERIA:

SIEVE NUMBER	% PASSING
3 INCHES	100
NO. 4	45 - 75
NO. 100	0 - 12
NO. 200	0 - 6

COMPACTION OF GRANULAR BACKFILL:

GRANULAR BACKFILL SHALL BE INSTALLED IN 6" MAXIMUM HORIZONTAL LIFTS AND COMPACTED TO NOT LESS THAN 95% OF THE MAXIMUM DRY DENSITY OF THE MATERIAL AT THE OPTIMUM MOISTURE CONTENT AS ESTABLISHED BY THE STANDARD PROCTOR TEST (ASTM D698).

7 S-2 GRANULAR BACKFILL FOR STRUCTURES

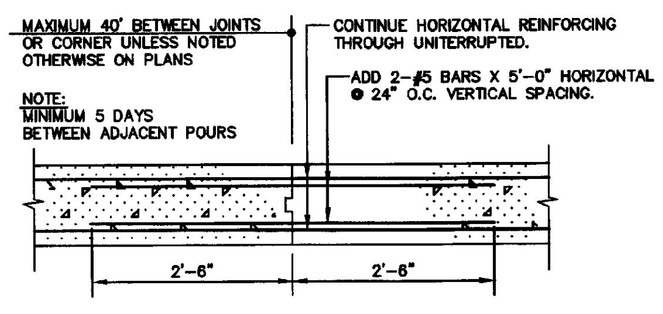

8 S-2 TYPICAL WALL CONSTRUCTION JOINT
N.T.S.

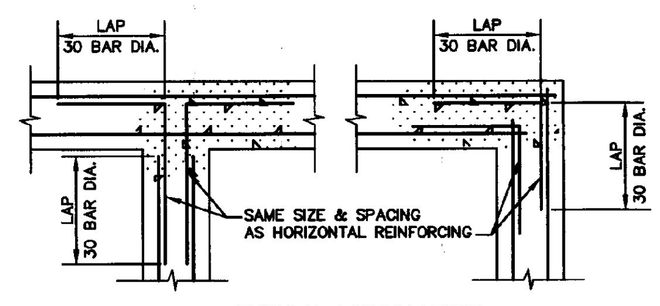

9 S-2 TYPICAL FOUNDATION WALL REINFORCING DETAILS
N.T.S.

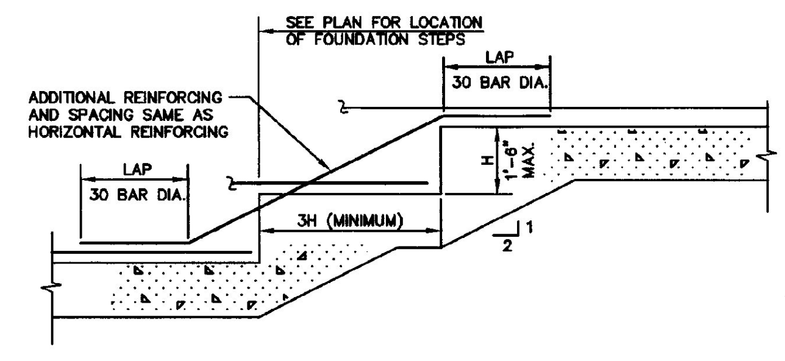

10 S-2 TYPICAL STEP FOOTING DETAIL
N.T.S.

REVISIONS	BY

COPYRIGHT © 2001
CHAMPLAIN CONSULTING ENGINEERS
ALL RIGHTS RESERVED

CHAMPLAIN CONSULTING ENGINEERS
85 PRIM ROAD, P.O. BOX 453
COLCHESTER, VERMONT 05446
(802) 863-8060
(802) 864-1878 FAX

STATE OF VERMONT
GREGORY J. BOMBARDIER
NO. 4496
REGISTERED PROFESSIONAL ENGINEER

INTERSTATE 89 SOUTHBOUND
WILLISTON INFORMATION CENTER
FOUNDATION DETAILS
WILLISTON VERMONT
PROJECT # IM-BRLDG(4)

DRAWN	CCE
CHECKED	GJB
SCALE	AS NOTED
DATE	01/16/01
JOB NO.	93114
SHEET	S2sb

OF 8 SHEETS