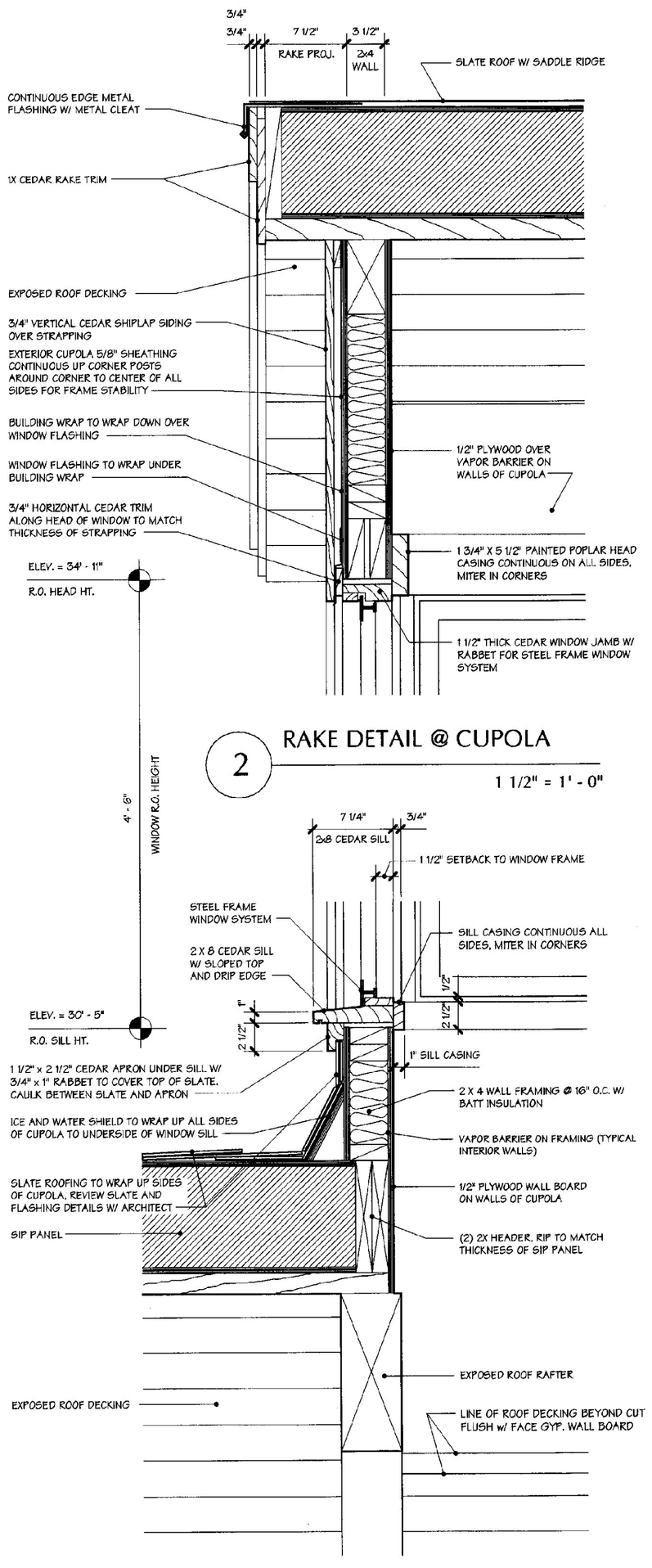

1 RAKE WALL DETAIL @ CUPOLA

1 1/2" = 1' - 0"

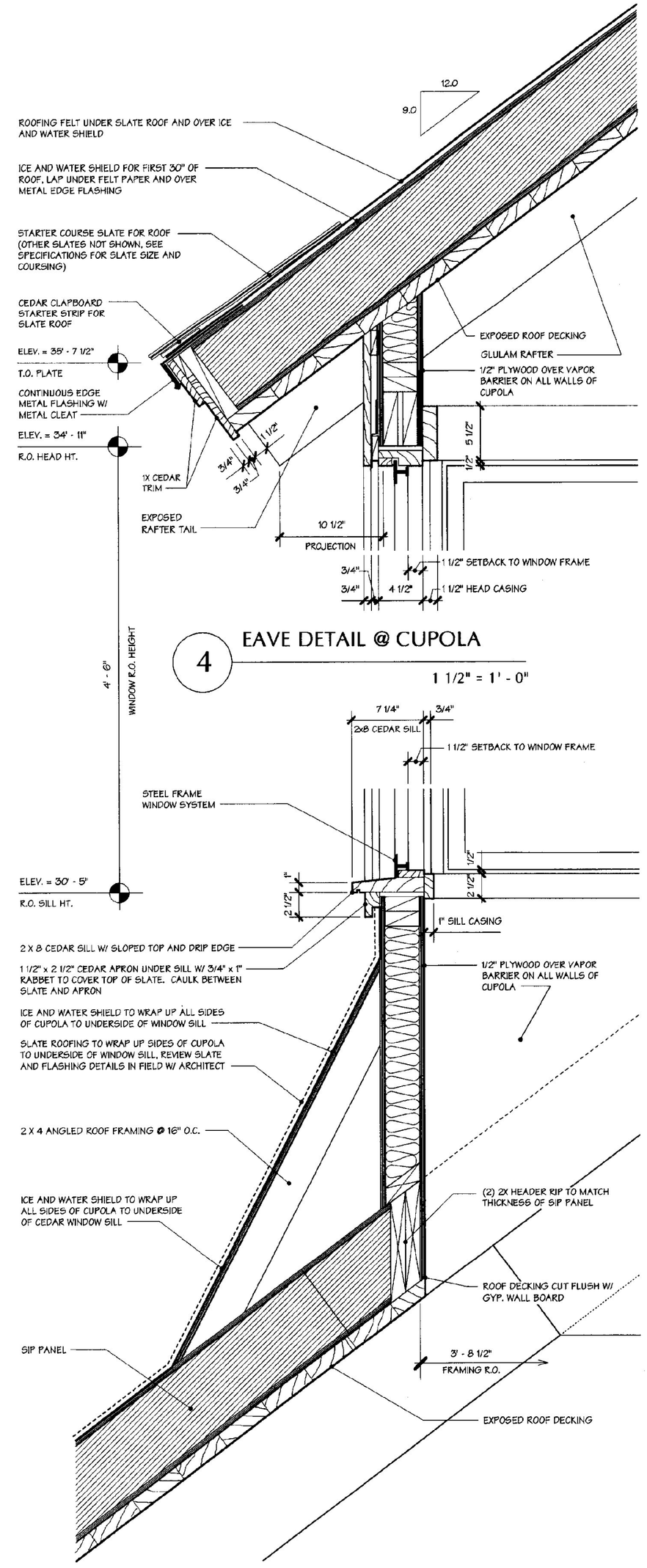

3 SECTION DETAIL @ CUPOLA

1 1/2" = 1' - 0"

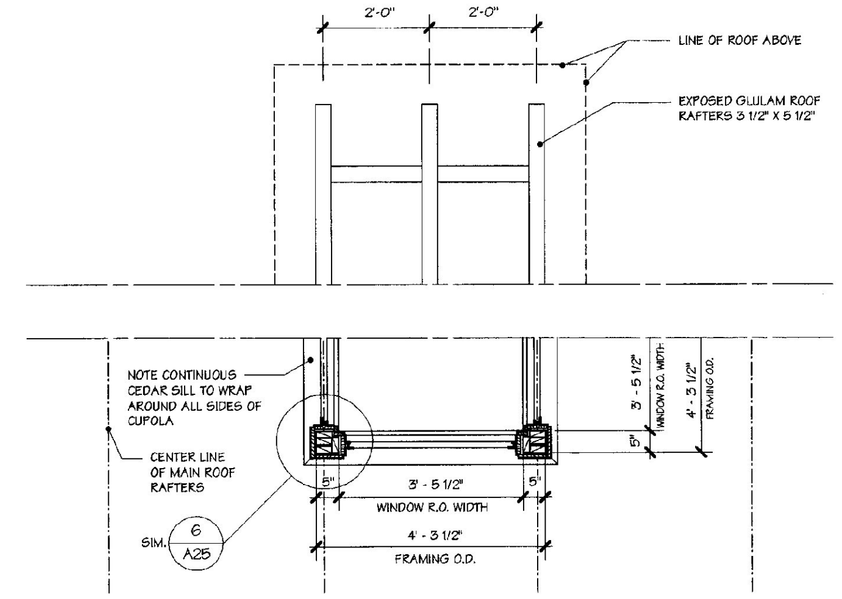

6 PLAN @ CUPOLA

1/2" = 1' - 0"

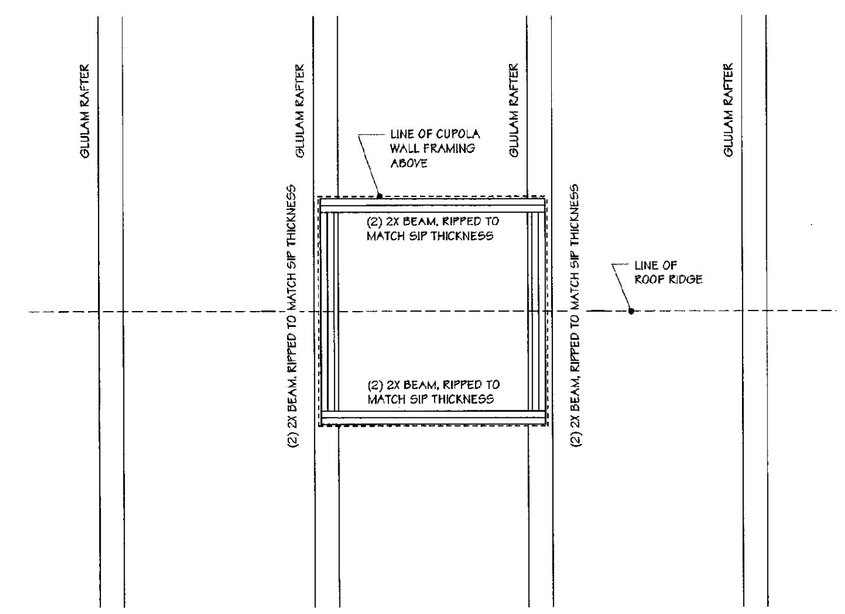

5 ROOF FRAMING PLAN @ CUPOLA

1/2" = 1' - 0"

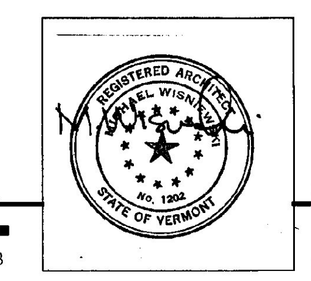

JANUARY 16, 2001

WILLISTON INFORMATION CENTER I89 Southbound

Project #: IM - BLDG (4)

DUNCAN • WISNIEWSKI ARCHITECTURE ▪
255 SOUTH CHAMPLAIN STREET, BURLINGTON, VERMONT 05401 802.864.6693

A30sb