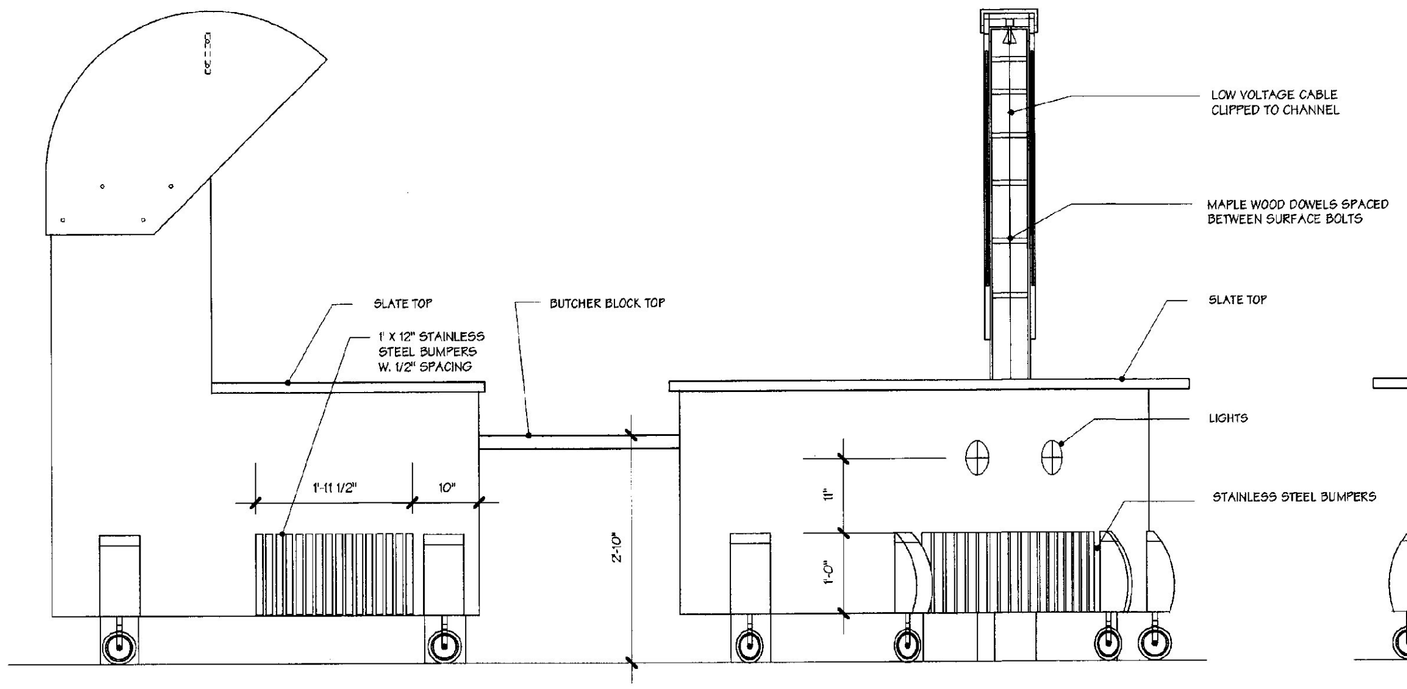

ELEVATION 4

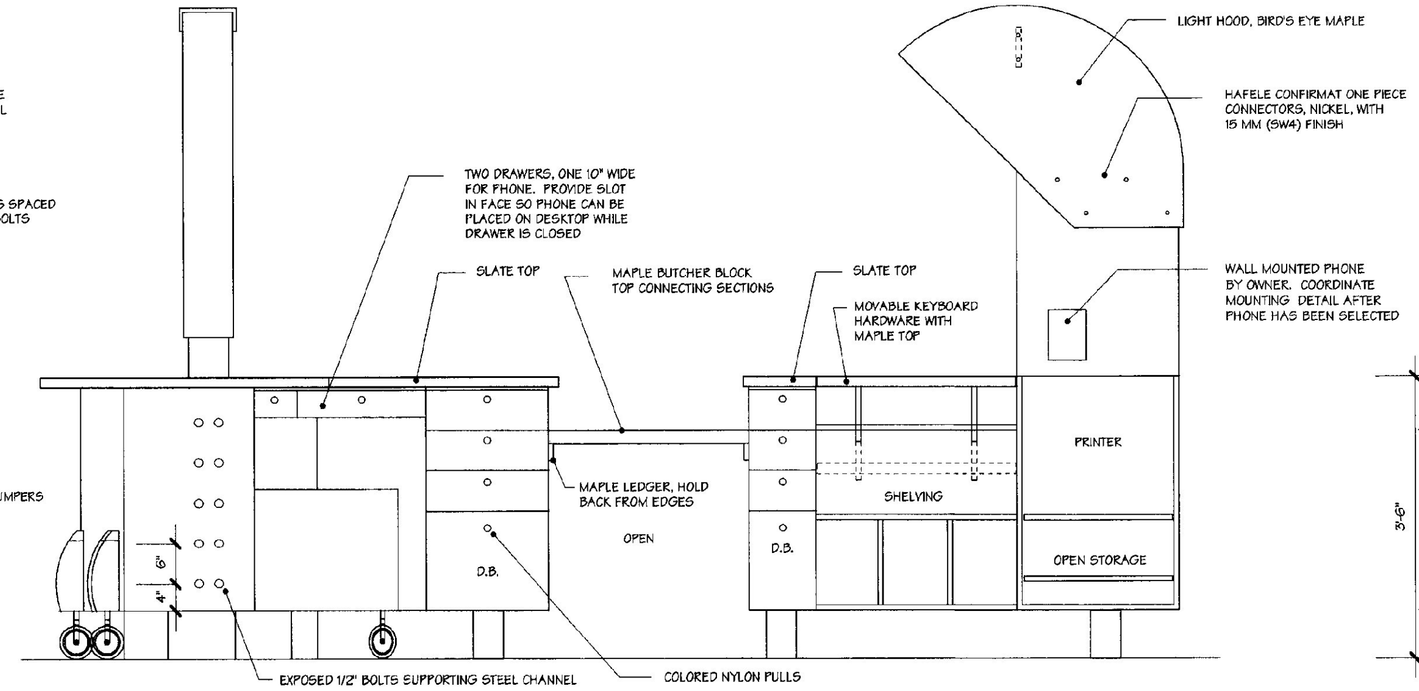

ELEVATION 2

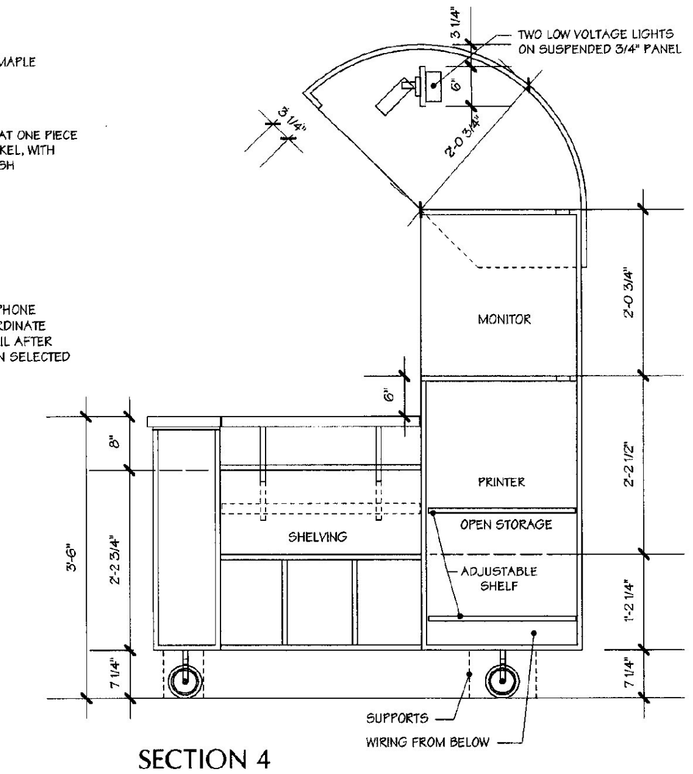

SECTION 4

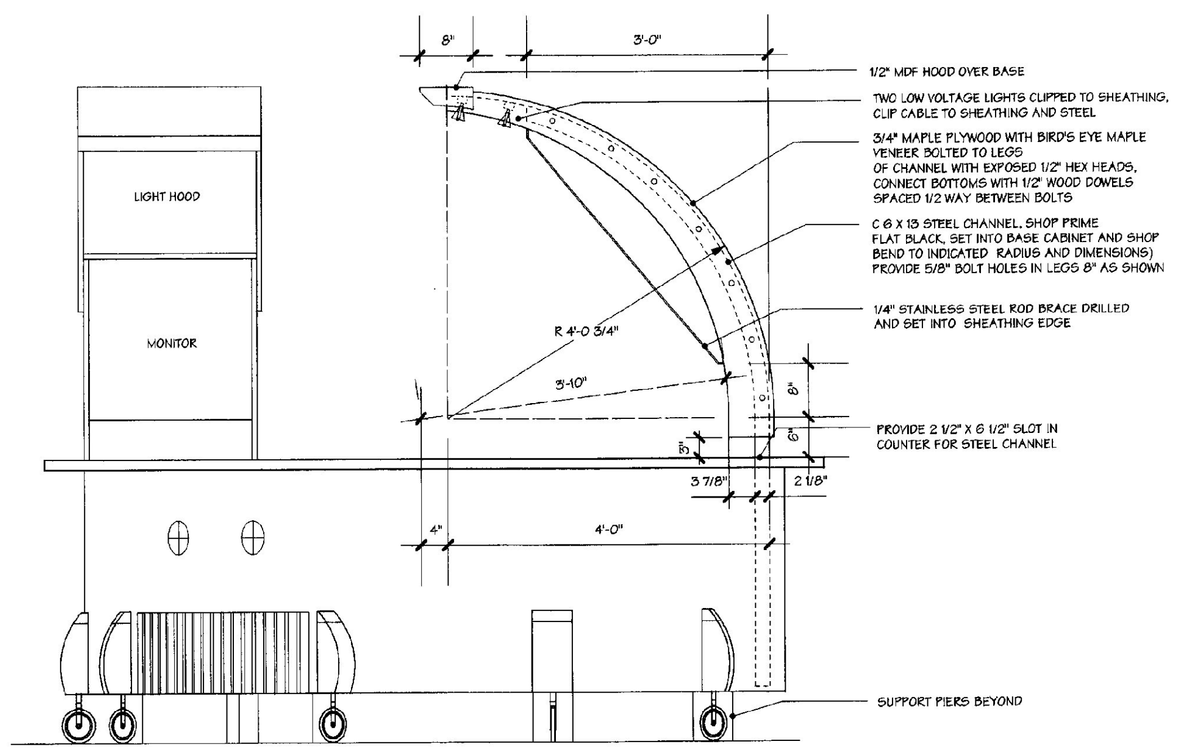

ELEVATION 3

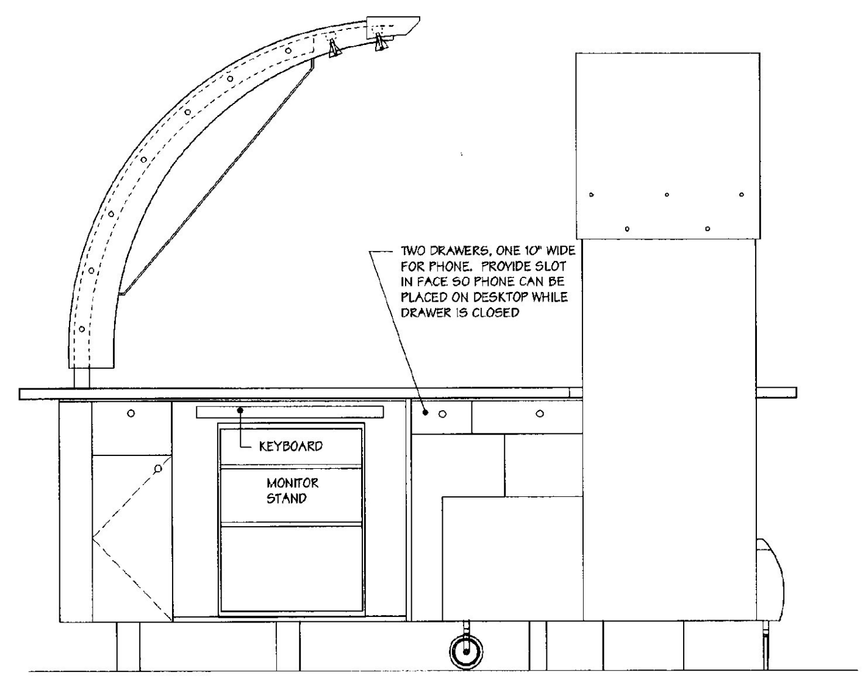

ELEVATION 1

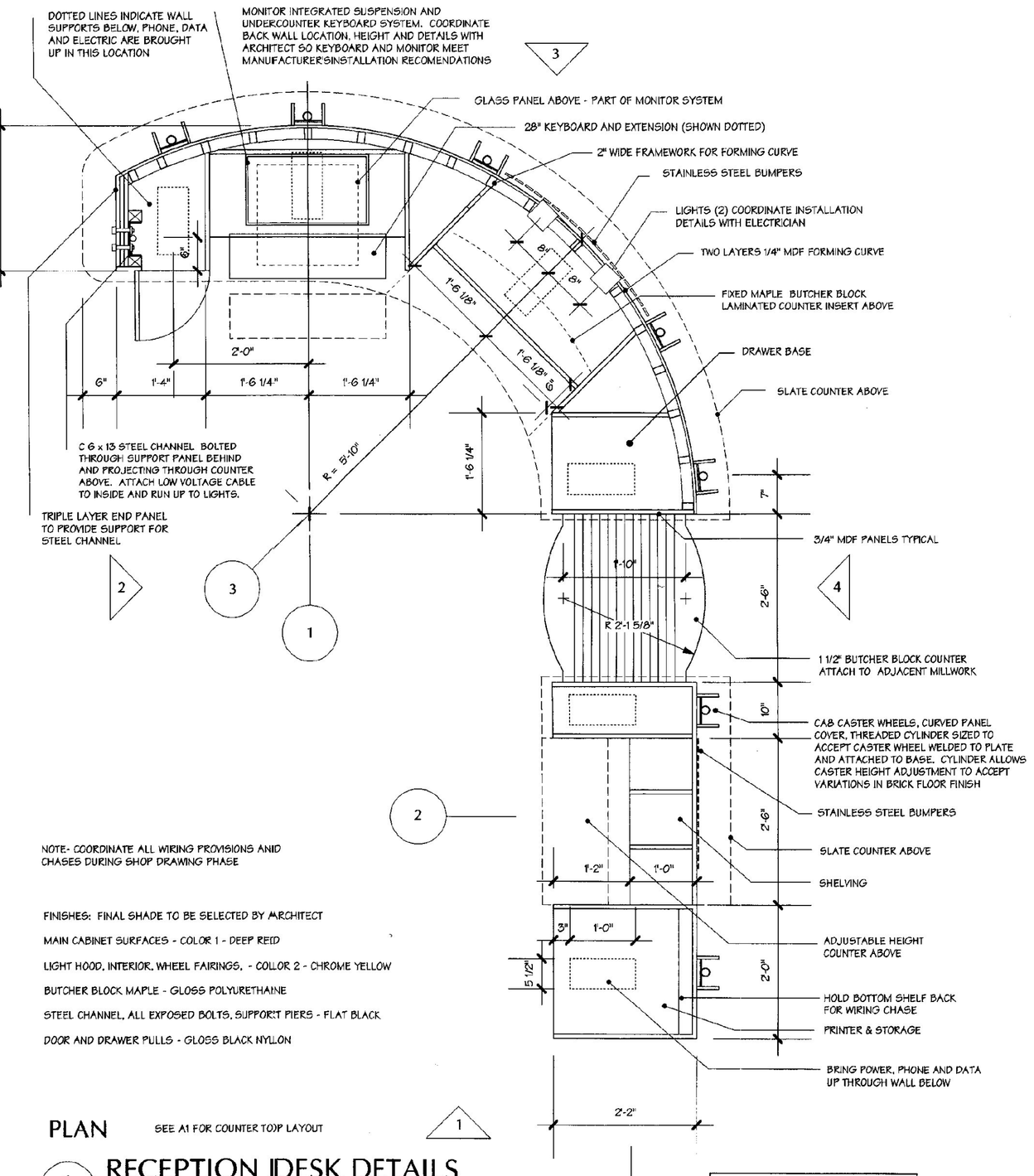

NOTE- COORDINATE ALL WIRING PROVISIONS AND CHASES DURING SHOP DRAWING PHASE

FINISHES: FINAL SHADE TO BE SELECTED BY ARCHITECT

MAIN CABINET SURFACES - COLOR 1 - DEEP REED

LIGHT HOOD, INTERIOR, WHEEL FAIRINGS, - COLLOR 2 - CHROME YELLOW

BUTCHER BLOCK MAPLE - GLOSS POLYURETHAINE

STEEL CHANNEL, ALL EXPOSED BOLTS, SUPPORT PIERS - FLAT BLACK

DOOR AND DRAWER PULLS - GLOSS BLACK NYLON

PLAN SEE A1 FOR COUNTER TOP LAYOUT

1 RECEPTION DESK DETAILS

3/4" = 1' - 0"

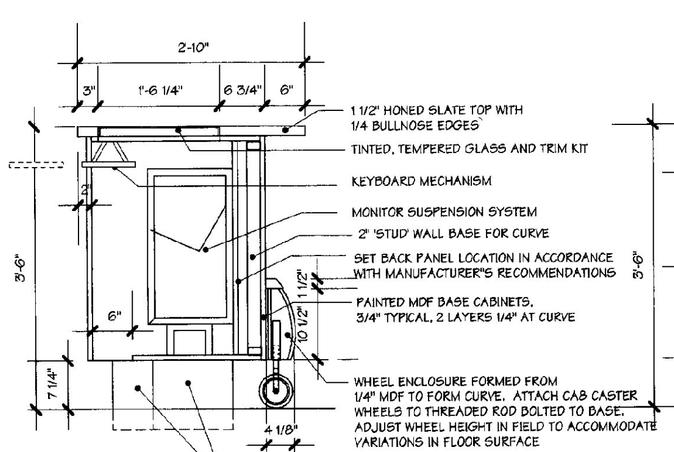

SECTION 1

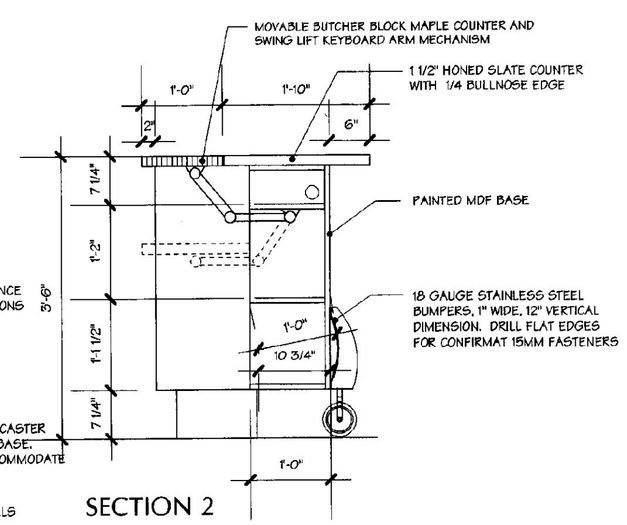

SECTION 2

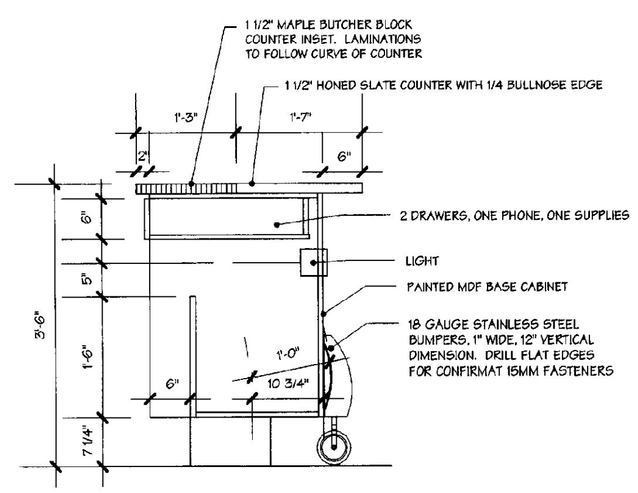

SECTION 3

SUPPORT PIERS TO BE CONSTRUCTED OF 2 X 6 STUD WALLS BOLTED INTO STRUCTURAL SLAB BELOW. PROVIDE LEVEL BASE FOR CABINETS. SHEATH WITH 1/2" CDX AND FINISH WITH PAINTED MDF BOARD. USE 15MM CONFIRMATS TO SECURE TO PIER THROUGH BOTTOM LAYER. BRING PHONE, DATA AND POWER UP INTO CABINET THROUGH PIERS AS REQUIRED

REGISTERED ARCHITECT MICHAEL WISNIEWSKI NO. 1202 STATE OF VERMONT

JANUARY 16, 2001

WILLISTON INFORMATION CENTER I89 Southbound

Project #: IM - BLDG (4)

DUNCAN • WISNIEWSKI ARCHITECTURE ▪
255 SOUTH CHAMPLAIN STREET, BURLINGTON, VERMONT 05401 802.864.6693

A26sb