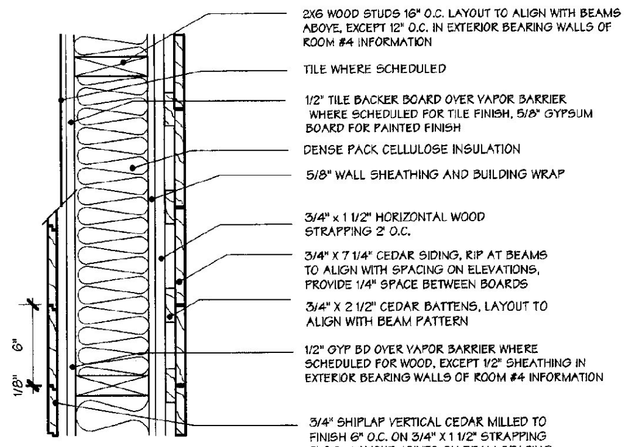

1 TYP EXTERIOR WALL - VERT SDG
1 1/2" = 1' - 0"

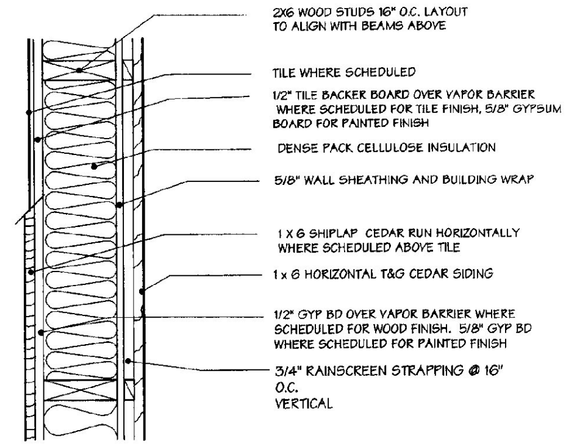

2 TYP EXTERIOR WALL - HOR SDG
1 1/2" = 1' - 0"

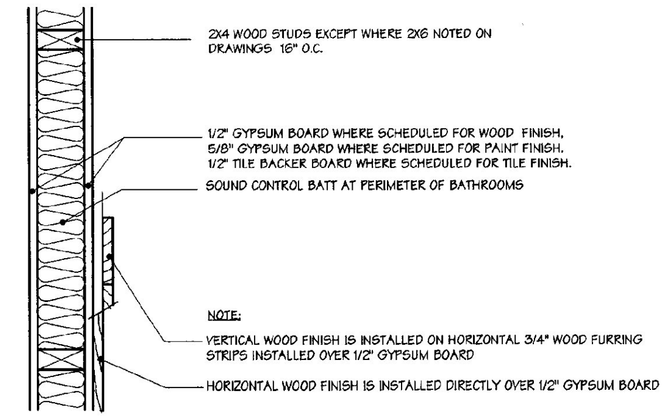

3 TYP INTERIOR WALL
1 1/2" = 1' - 0"

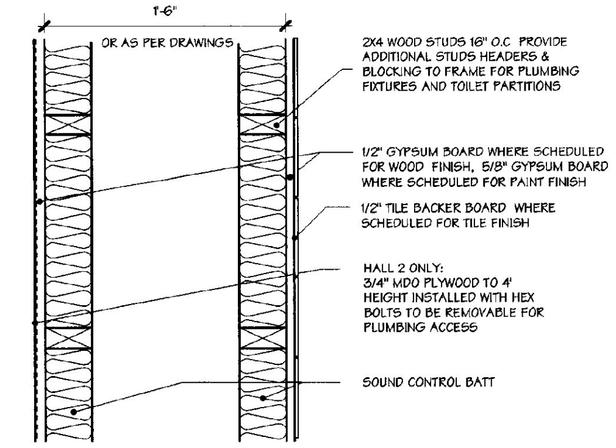

4 TYP PLUMBING WALL
1 1/2" = 1' - 0"

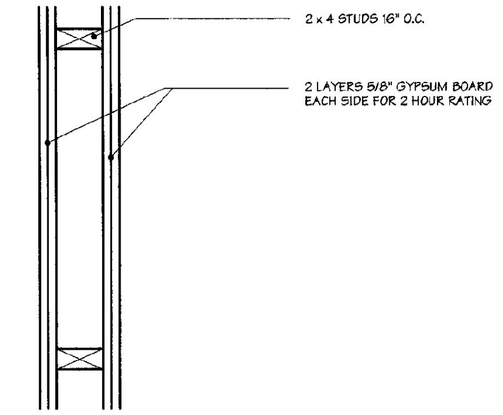

5 2 HR RATED WALL
1 1/2" = 1' - 0"

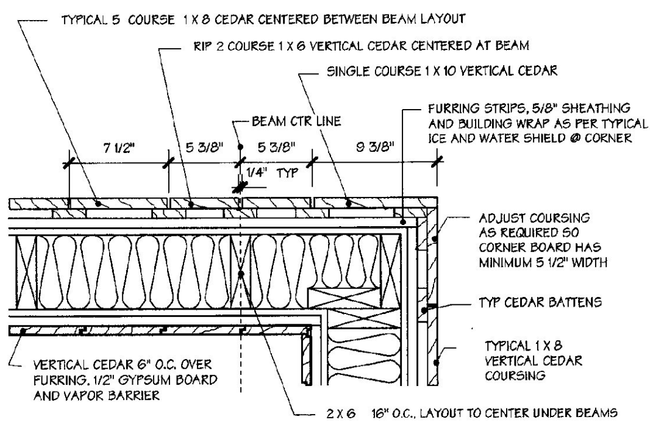

6 TYP CORNER -VERT SIDING
1 1/2" = 1' - 0"

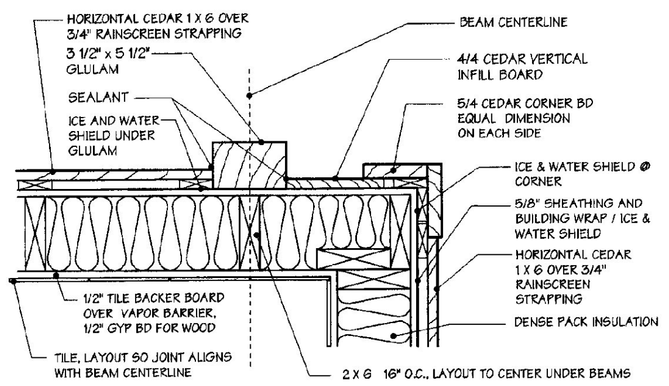

7 TYP CORNER - HORIZ SIDING
1 1/2" = 1' - 0"

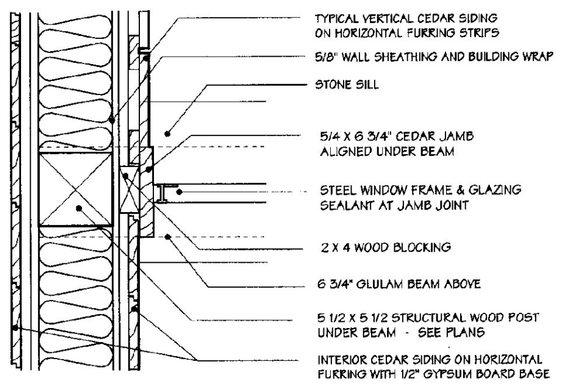

8 WALL/POST/WINDOW@ ENTRY
1 1/2" = 1' - 0"

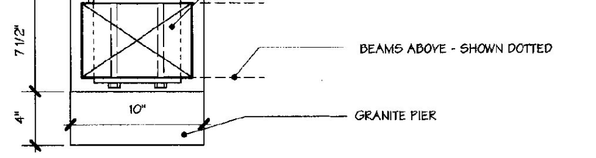

9 POST/PIER @ GABLE END
1 1/2" = 1' - 0"

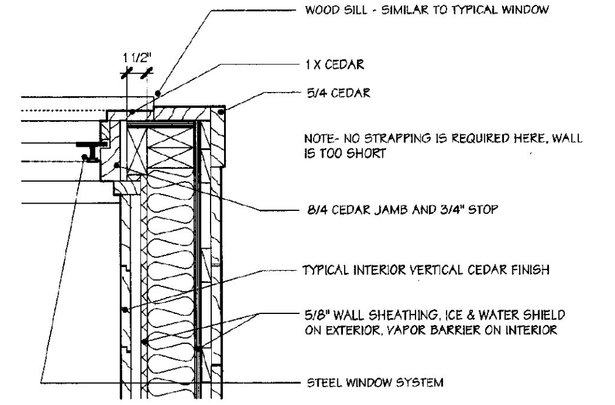

10 ENTRY DORMER WALL
1 1/2" = 1' - 0"

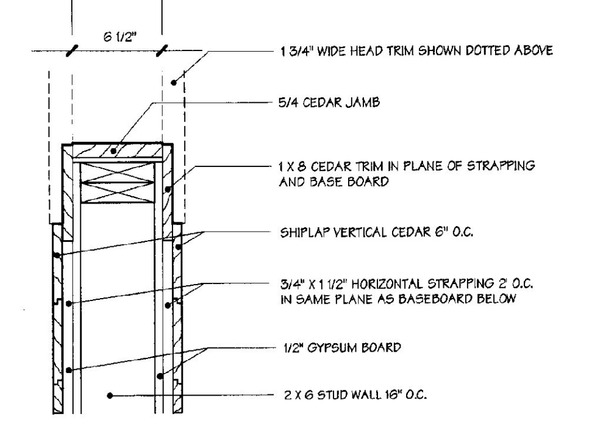

11 INTERIOR OPENING TRIM
1 1/2" = 1' - 0"

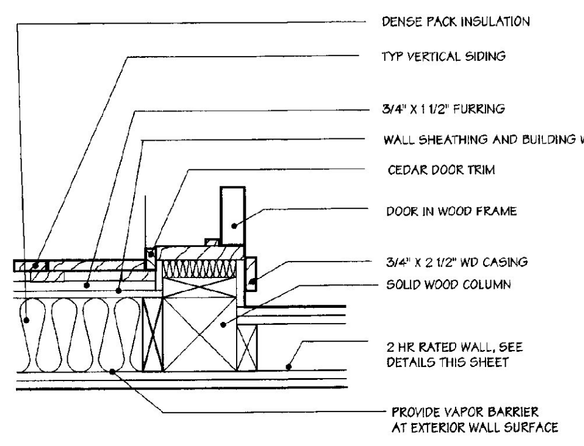

12 DETAIL AT REAR ENTRY
1 1/2" = 1' - 0"

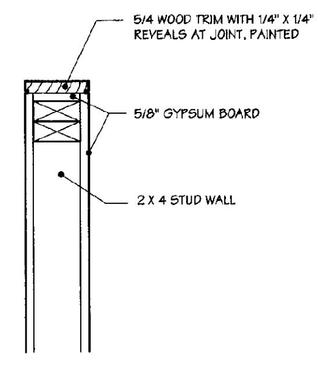

13 CASING DETAIL
1 1/2" = 1' - 0"

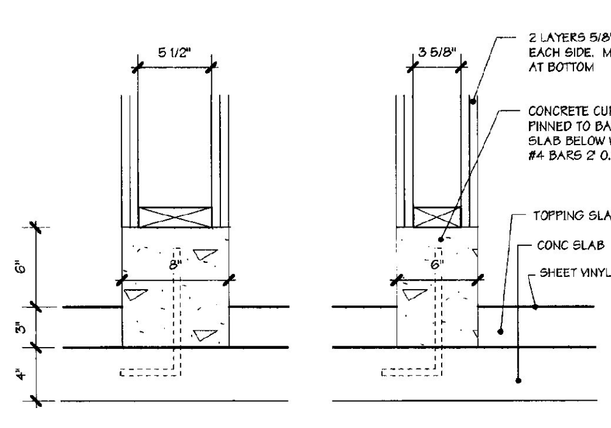

14 WALL ACCESS HATCH
1 1/2" = 1' - 0"

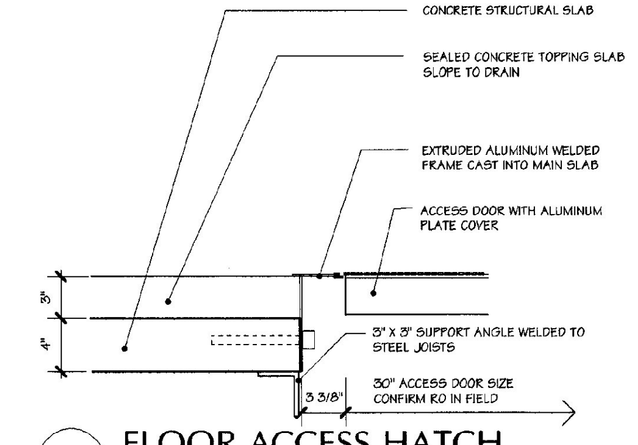

15 FLOOR ACCESS HATCH
1 1/2" = 1' - 0"

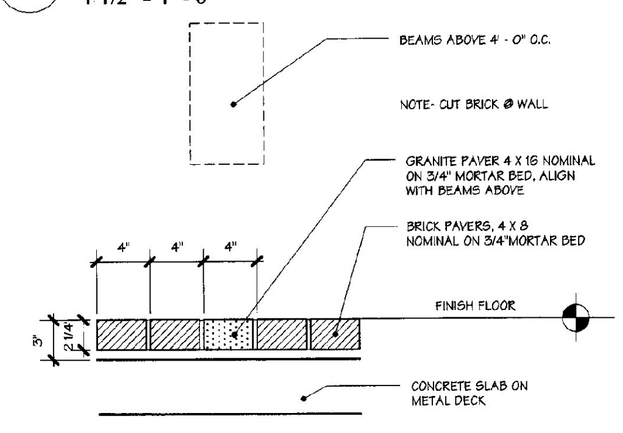

16 BRICK & GRANITE FLOORING
1 1/2" = 1' - 0"

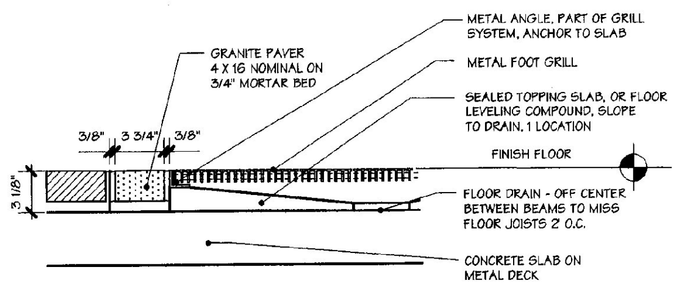

17 FLOOR GRATE DETAIL
1 1/2" = 1' - 0"

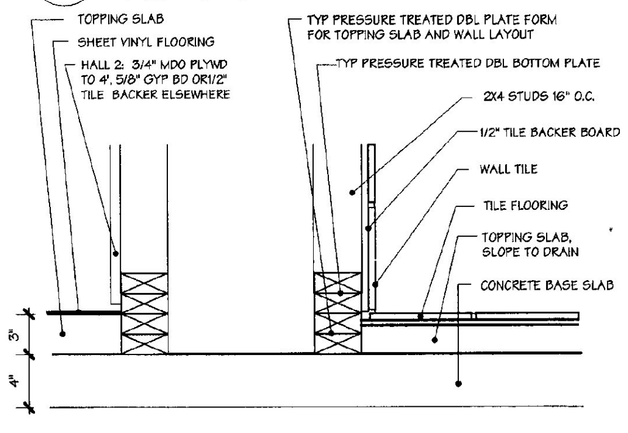

18 PLUMBING CHASE/FLOOR DETAIL
1 1/2" = 1' - 0"

1 1/2" = 1' - 0"

19 FLOOR CURBS AT 2 HR WALL
1 1/2" = 1' - 0"

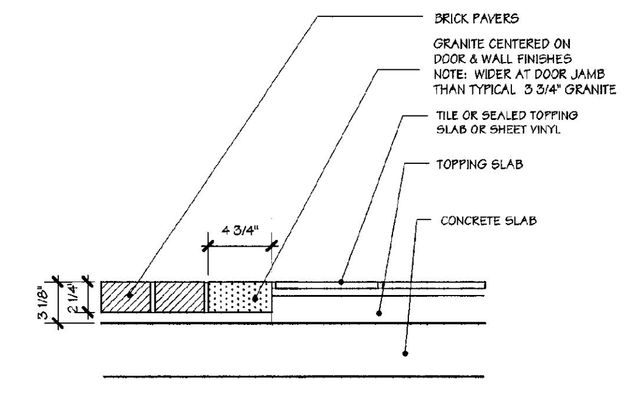

20 BRICK & TILE FLOOR JOINT
1 1/2" = 1' - 0"

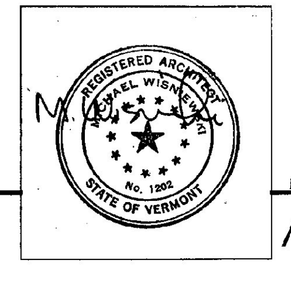

JANUARY 16, 2001

WILLISTON INFORMATION CENTER I89 Southbound

Project #: IM - BLDG (4)

DUNCAN • WISNIEWSKI ARCHITECTURE ▪
255 SOUTH CHAMPLAIN STREET, BURLINGTON, VERMONT 05401 802.864.6693

A22sb