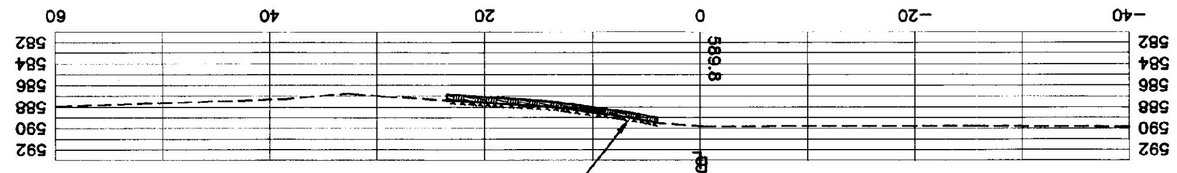

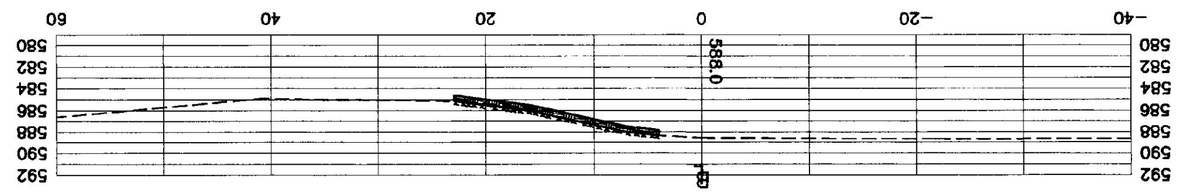

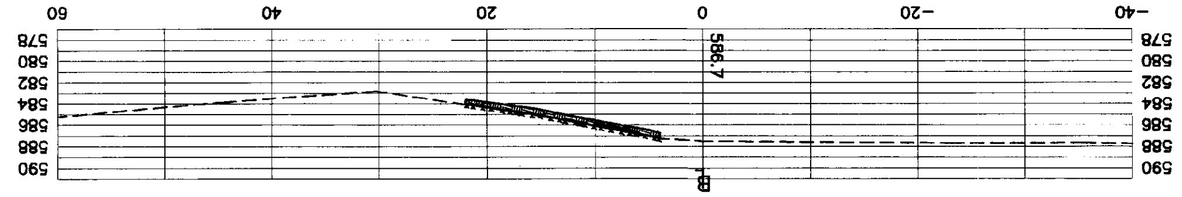

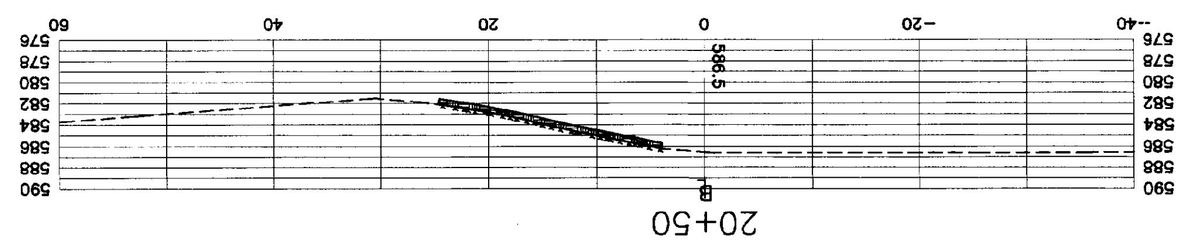

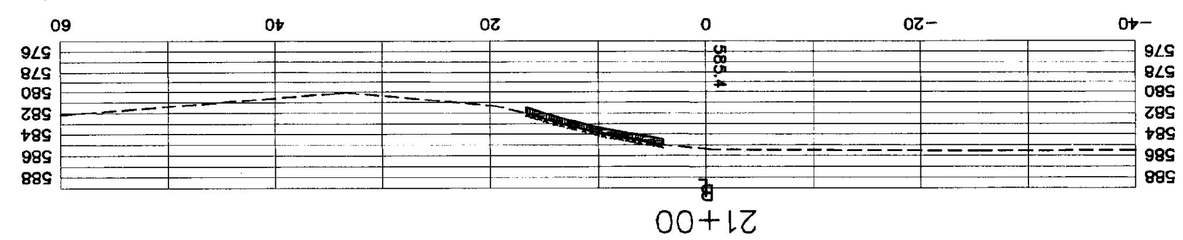

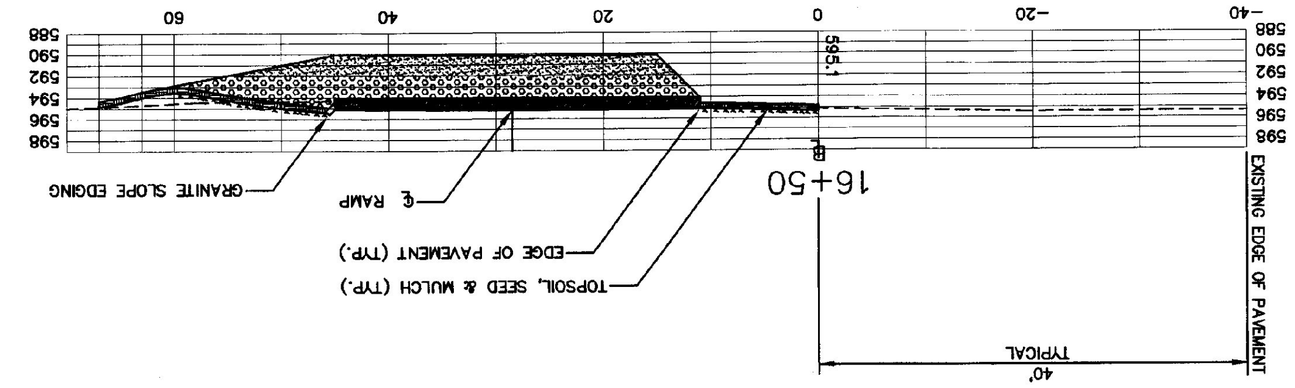

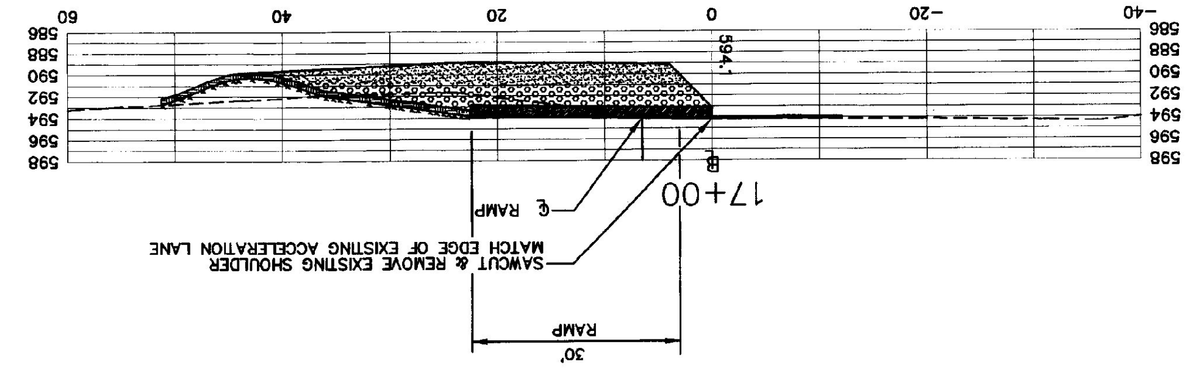

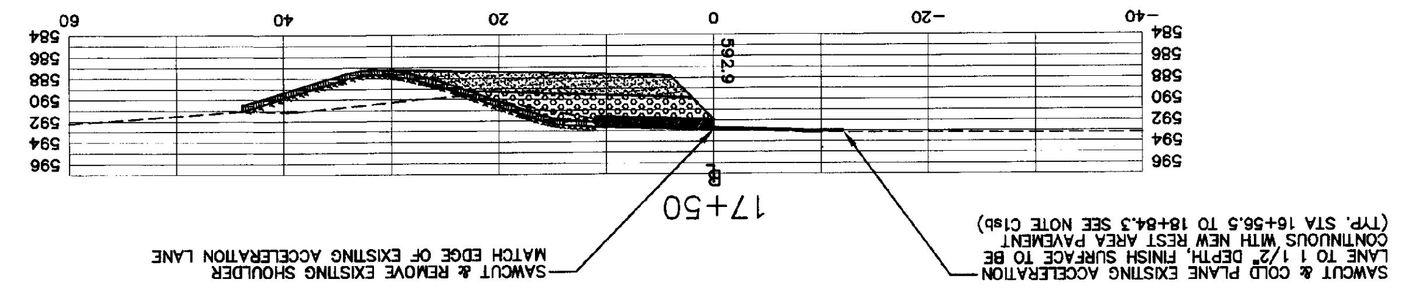

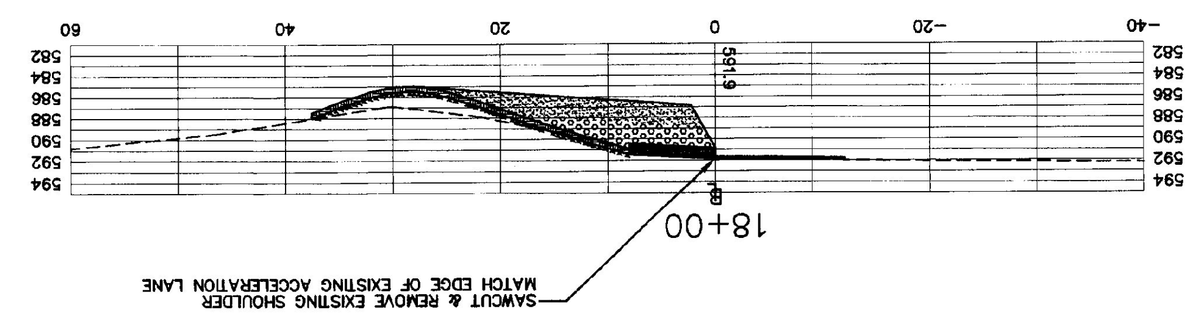

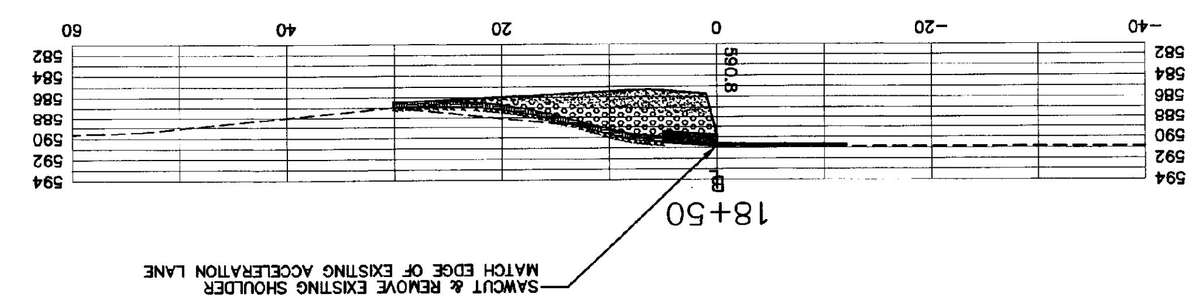

DWG. FILE: C:\SISK\CWO\93114-S3391\B-17sheet.dwg PLOTDATE: 2001-10-15 15:50:00

DRAWN	CCE
CHECKED	PD
SCALE	1" = 10'
DATE	01/16/01
JOB NO.	93114
SHEET	C17sb

OF 19 SHEETS

INTERSTATE 89 SOUTHBOUND
WILLISTON INFORMATION CENTER
STA 16+50–21+00 CROSS SECTIONS

WILLISTON PROJECT # IM-BLDG(4) VERMONT

STATE OF VERMONT
PAUL DUCHESNEAU
No. 3587
LICENSED
PROFESSIONAL ENGINEER

CHAMPLAIN CONSULTING ENGINEERS
85 PRIM ROAD, P.O. BOX 453
COLCHESTER, VERMONT 05446
(802) 863-8080
(802) 864-1878 FAX

COPYRIGHT © 2001
CHAMPLAIN CONSULTING ENGINEERS
ALL RIGHTS RESERVED

REVISIONS	BY