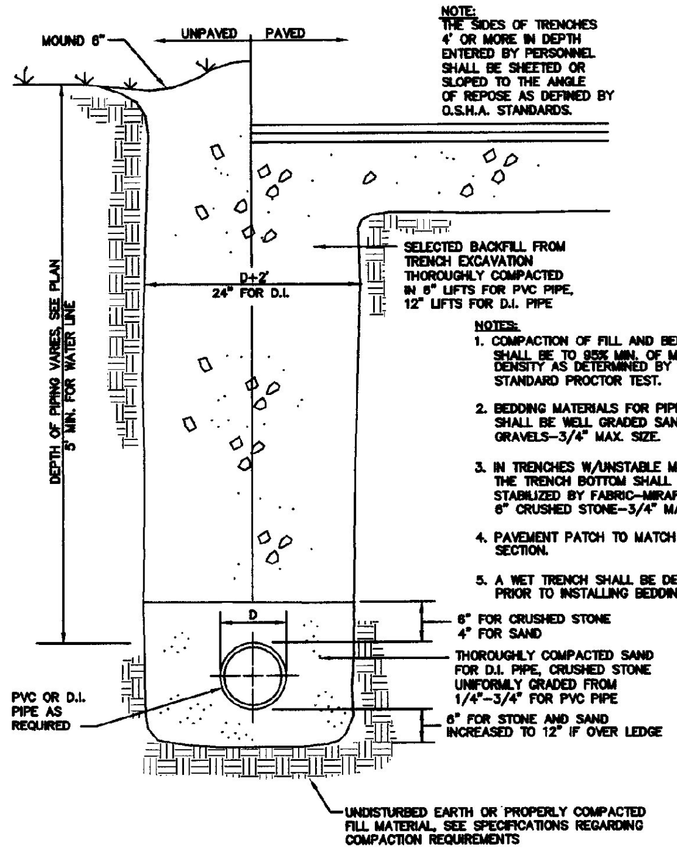

1 TYPICAL EXCAVATION TRENCH DETAIL
N.T.S.

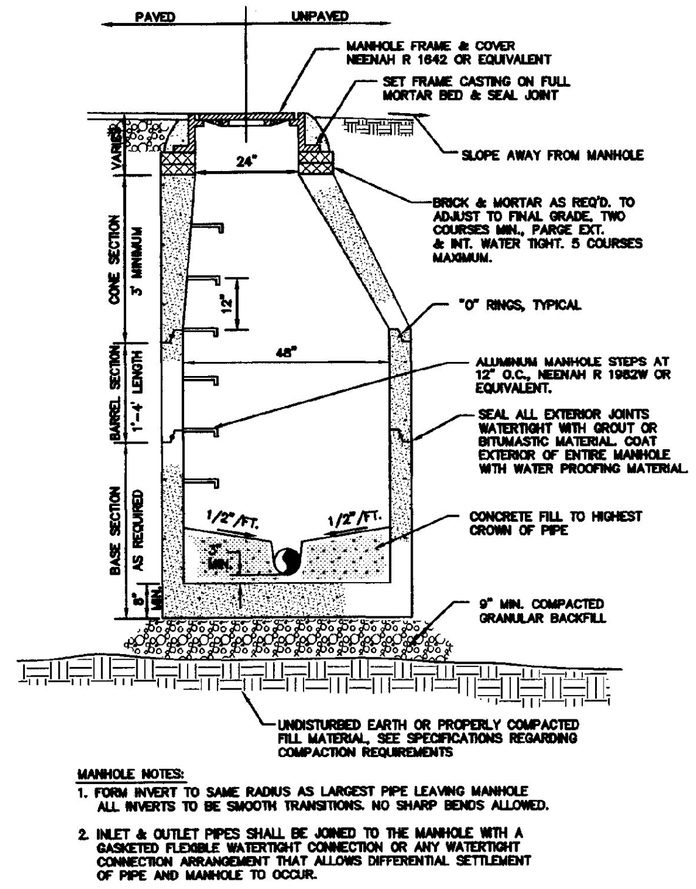

MANHOLE NOTES:
1. FORM INVERT TO SAME RADIUS AS LARGEST PIPE LEAVING MANHOLE ALL INVERTS TO BE SMOOTH TRANSITIONS. NO SHARP BENDS ALLOWED.
2. INLET & OUTLET PIPES SHALL BE JOINED TO THE MANHOLE WITH A GASKETED FLEXIBLE WATERTIGHT CONNECTION OR ANY WATERTIGHT CONNECTION ARRANGEMENT THAT ALLOWS DIFFERENTIAL SETTLEMENT OF PIPE AND MANHOLE TO OCCUR.

2 TYPICAL PRE-CAST CONCRETE MANHOLE
N.T.S.

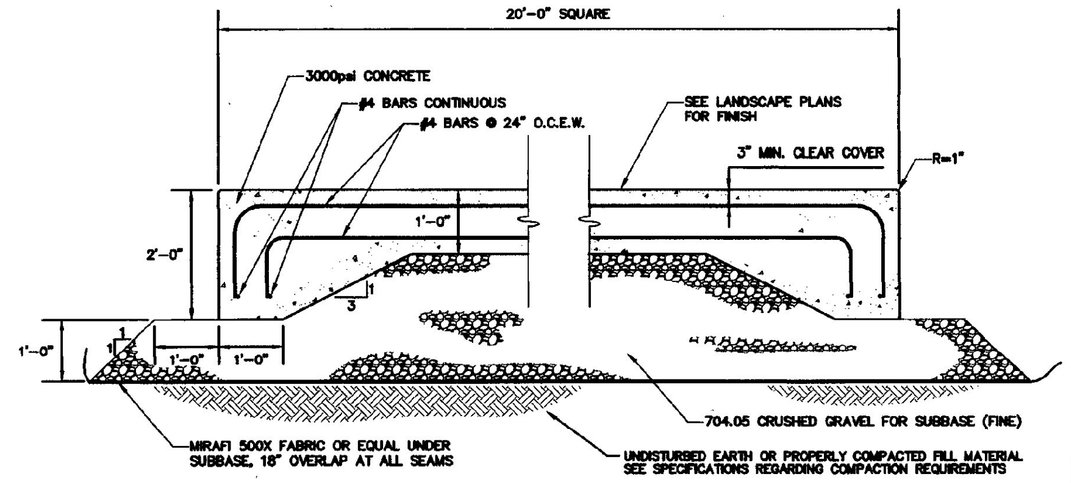

3 SCULPTURE PAD SECTION
N.T.S.

NOTES:
1. COMPACTION OF BACKFILL AND BEDDING SHALL BE A MINIMUM OF 90% (95% UNDER ROADWAY SURFACES) OF MAXIMUM DRY DENSITY DETERMINED IN THE STANDARD PROCTOR TEST (ASTM D698).
2. BEDDING MATERIAL SHALL NOT BE PLACED ON FROZEN SUBGRADE.
3. APPROVED BACKFILL SHALL NOT CONTAIN ANY STONES MORE THAN 1' IN LARGEST DIMENSION, REDUCED TO 6" UNDER ROADWAYS, OR CONTAIN ANY FROZEN, WET, OR ORGANIC MATERIAL.
4. TRENCHES SHALL BE COMPLETELY DEWATERED PRIOR TO PLACING OF PIPE BEDDING MATERIAL AND KEPT DEWATERED DURING INSTALLATION OF PIPE AND BACKFILL.
5. IN TRENCHES WITH UNSTABLE MATERIALS, TRENCH BOTTOM SHALL FIRST BE STABILIZED BY PLACEMENT OF FILTER FABRIC THEN CRUSHED STONE (3/4" MAXIMUM).
6. THE SIDES OF TRENCHES 4' OR MORE IN DEPTH ENTERED BY PERSONNEL SHALL BE SHEETED OR SLOPED TO THE ANGLE OF REPOSE AS DEFINED BY O.S.H.A. STANDARDS.
7. BEDDING MATERIAL SHALL CONSIST OF CRUSHED STONE, GRAVEL OR SAND WITH A MAXIMUM SIZE OF 3/4". SUBMIT A SAMPLE TO THE ENGINEER FOR APPROVAL.

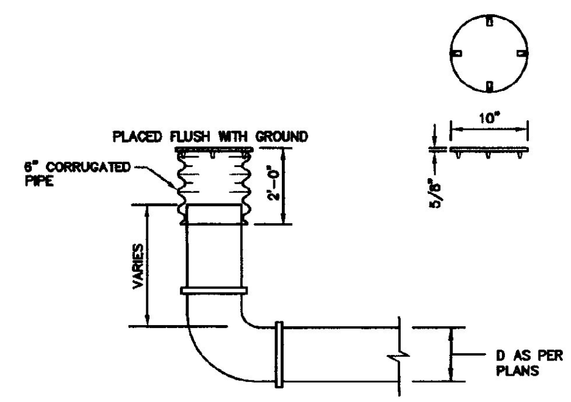

4 UNDERDRAIN FLUSHING BASIN
N.T.S.

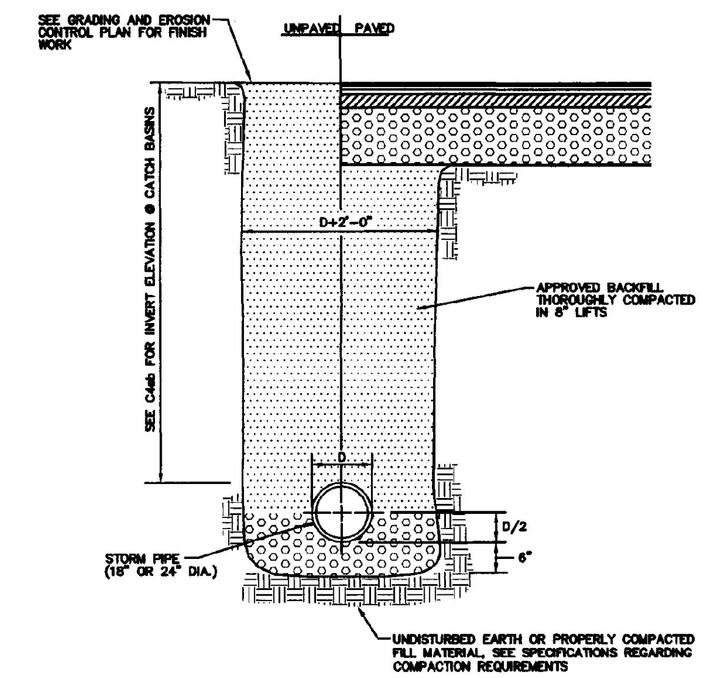

5 STORM DRAINAGE TYPICAL TRENCH
N.T.S.

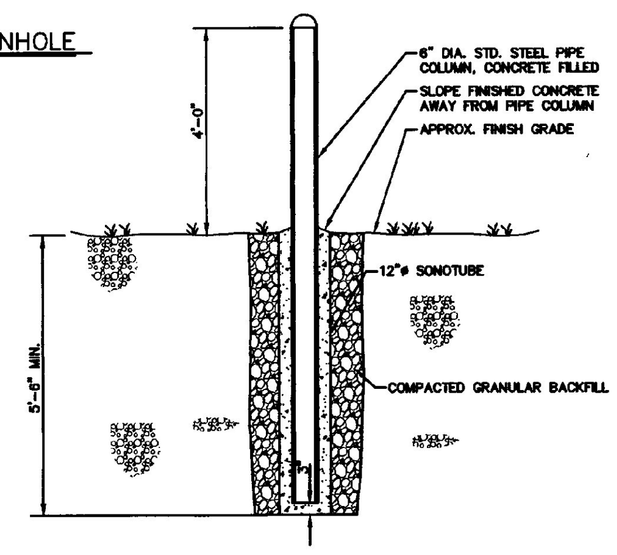

6 EXTERIOR BOLLARD
N.T.S.

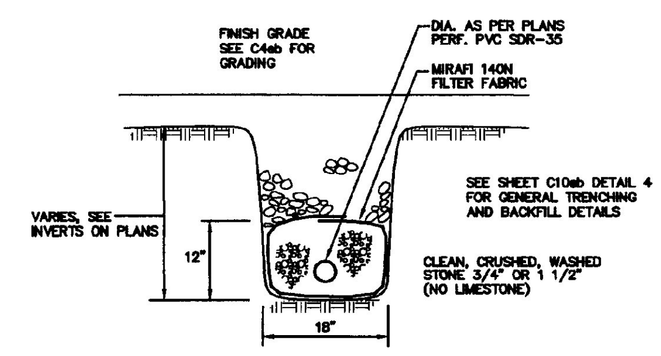

7 UNDERDRAIN UNDER NON-PAVED AREAS
N.T.S.

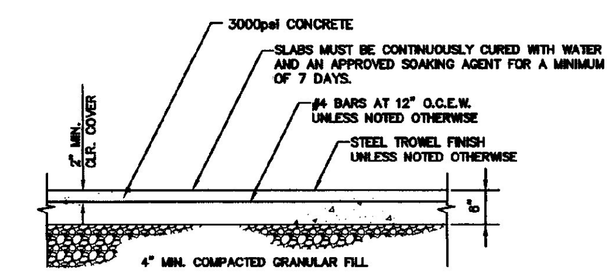

8 TYPICAL SLAB-ON GRADE
N.T.S.

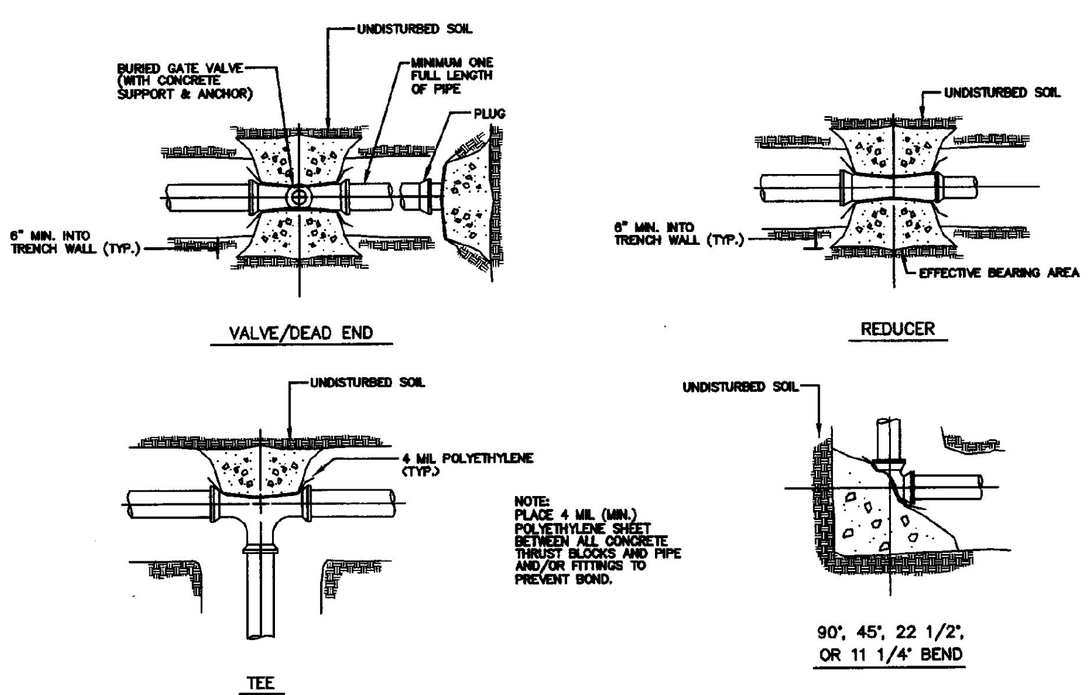

9 THRUST BLOCK DETAILS
N.T.S.

MINIMUM AREA OF BEARING SURFACE OF CONC. THRUST BLOCKS (in square feet)

3"				4"				6"				8"				12"					
ENDS & TEES	90° ELB.	45° ELB.	22.5° ELB. OR LESS	ENDS & TEES	90° ELB.	45° ELB.	22.5° ELB. OR LESS	ENDS & TEES	90° ELB.	45° ELB.	22.5° ELB. OR LESS	ENDS & TEES	90° ELB.	45° ELB.	22.5° ELB. OR LESS	ENDS & TEES	90° ELB.	45° ELB.	22.5° ELB. OR LESS	SOIL CONDITION	SAFE BEARING LOAD (P.S.F.)
0.5	0.5	0.5	0.5	0.5	1.0	0.5	0.5	1.0	1.5	1.0	0.5	2.0	2.5	1.5	1.0	4.0	5.5	3.0	1.5	SOUND SHALE	10,000
1.0	1.0	1.0	0.5	1.5	2.0	1.0	0.5	3.0	4.0	2.0	1.0	4.5	6.5	3.5	2.0	10.0	14.0	7.5	4.0	CEMENTED GRAVEL & SAND	4,000
1.0	1.5	1.0	0.5	2.0	2.5	1.5	1.0	3.5	5.0	3.0	1.5	6.0	8.5	5.0	2.5	13.0	18.5	10.0	5.0	COARSE & FINE GRAVEL SAND	3,000
1.5	2.5	1.5	1.0	2.5	3.5	2.0	1.0	5.5	7.5	4.0	2.0	9.0	13.0	7.0	3.5	20.0	27.5	15.0	8.0	SILTY CLAY (ONLY BE SPREAD)	2,000
3.0	4.5	2.5	1.5	5.0	7.0	4.0	2.0	10.5	15.0	8.0	4.0	18.0	25.0	14.0	7.0	39.0	55.0	30.0	15.0	SOFT CLAY	1,000
MAXIMUM WATER PRESSURE = 300 P.S.I. NOTE: REDUCER BEARING AREA = 45 BEND, LARGER PIPE																					

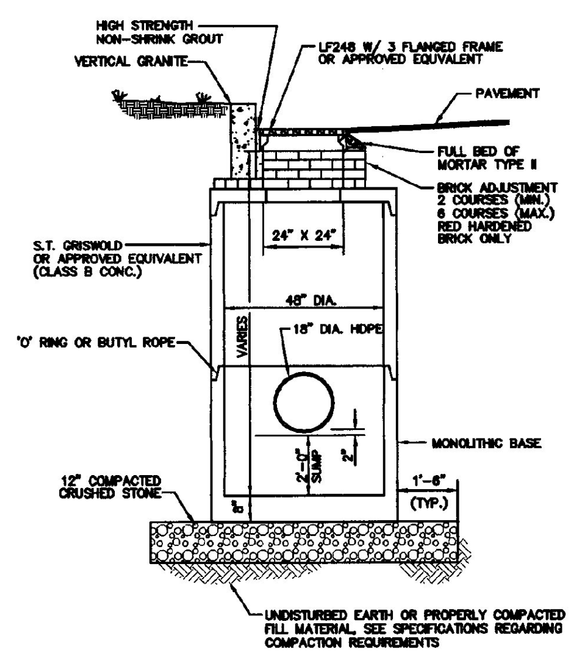

10 TYPICAL CATCH BASIN @ VERTICAL CURB
N.T.S.

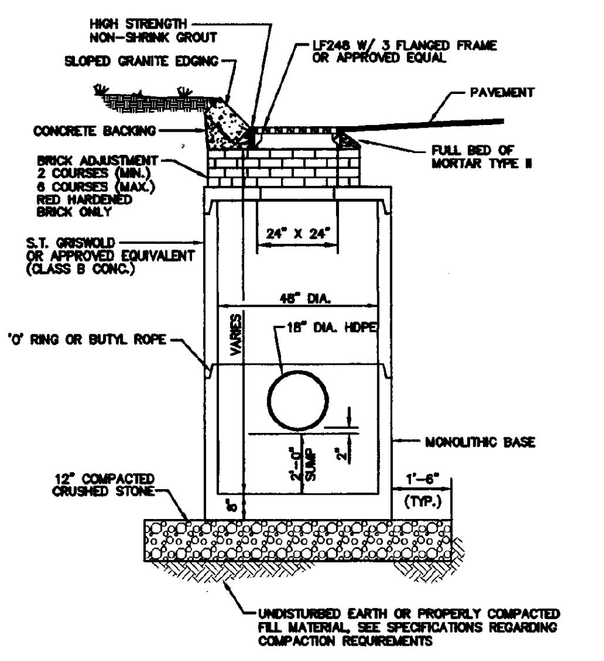

11 TYPICAL CATCH BASIN @ SLOPED CURB
N.T.S.

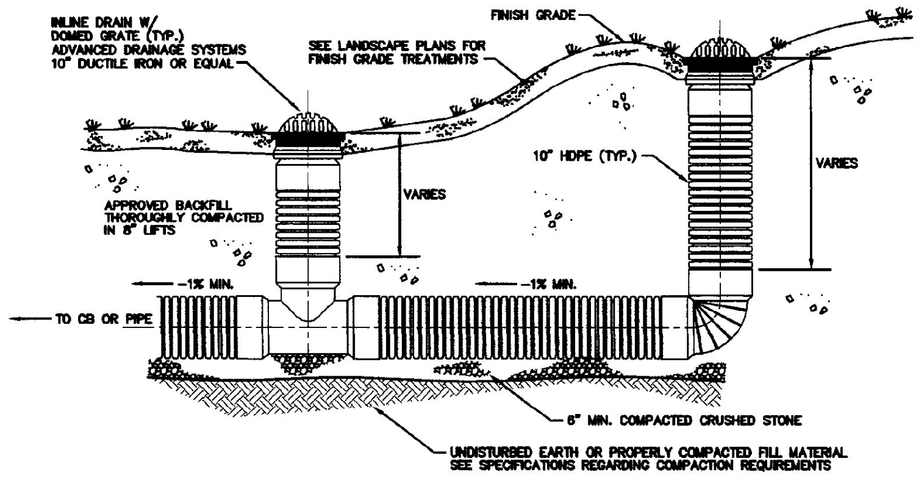

12 TYPICAL YARD DRAIN
N.T.S.

REVISIONS	BY

COPYRIGHT © 2001
CHAMPLAIN CONSULTING ENGINEERS
ALL RIGHTS RESERVED

CHAMPLAIN CONSULTING ENGINEERS
85 PRIM ROAD, P.O. BOX 453
COLCHESTER, VERMONT 05446
(802) 863-8060
(802) 864-1876 FAX

STATE OF VERMONT
PAUL DUCHESNEAU
No. 3567
REGISTERED PROFESSIONAL ENGINEER

INTERSTATE 89 SOUTHBOUND
WILLISTON INFORMATION CENTER
DETAILS
WILLISTON VERMONT
PROJECT # IM-BLDG(4)

DRAWN	CCE
CHECKED	PD
SCALE	NONE
DATE	01/16/01
JOB NO.	93114
SHEET	C10sb

OF 19 SHEETS

CCS/ALC File: C:\SCS\SVRPG\93114-SB89\Sb-10sbdwnl.dwg Plotted: 2001-01-15 15:36:55