DURABLE 4" WHITE LINE

STA. 3617+00 (12' LT) TO STA. 3617+50 (12' LT)
STA. 3617+50 (12' LT) TO STA. 3620+50 (24' LT)
STA. 3620+50 (24' LT) TO STA. 3621+25 (24' LT)

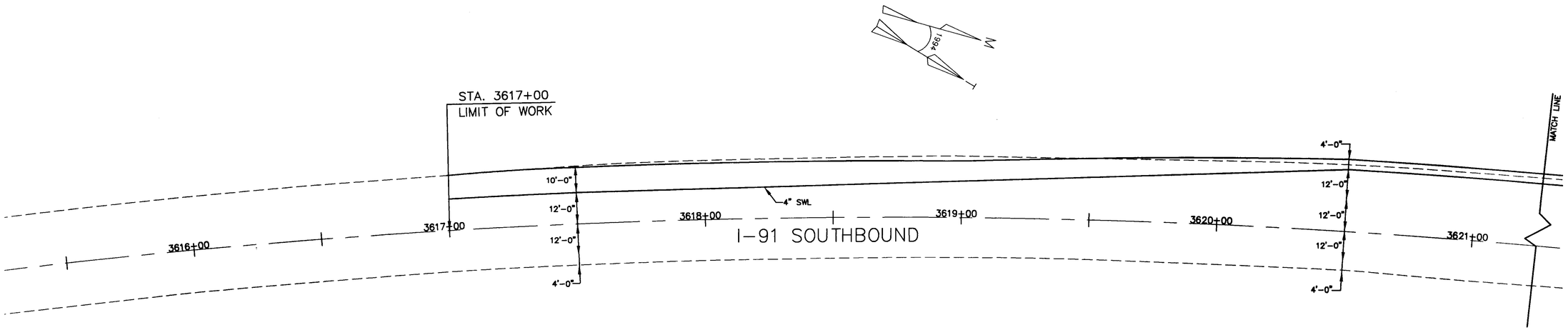

STRIPING ABBREVIATIONS	
ABBREVIATION	DESCRIPTION
DWL	4" DOTTED WHITE LINE
SWL	4" SOLID WHITE LINE
SYL	4" SOLID YELLOW LINE
BWL	4" BROKEN WHITE LINE
WTL	8" WHITE TRANSVERSE LINE

ALL PAVEMENT MARKINGS SHALL BE THERMOPLASTIC.

GRAPHIC SCALE

20 0 10 20 40 80

(IN FEET)
1 inch = 20 ft.

N·B·F
Nimtz◦ Berryhill◦ Figiel
ARCHITECTS P.C.
24 1/2 Center Street, Rutland, Vermont 05701

Steven J. Banik, P.E.
STRUCTURAL ENGINEER
Cuttingsville, Vermont 05738

DuBois & King inc.
·Highway Design
·Site Engineering
·Mechanical and
·Electrical Engineers

HARTFORD, VT. I-91
INFORMATION CENTERS

SOUTHBOUND ACCEL.
SIGNING. LIGHTING, &
PAVEMENT MARKING

FINAL PLANS

2/15/96

R29

C:\DATA\PINI2688L1\SBACSTRP Mon Mar 11 15:54:05 1996

Lpw 3-15-96

N-174