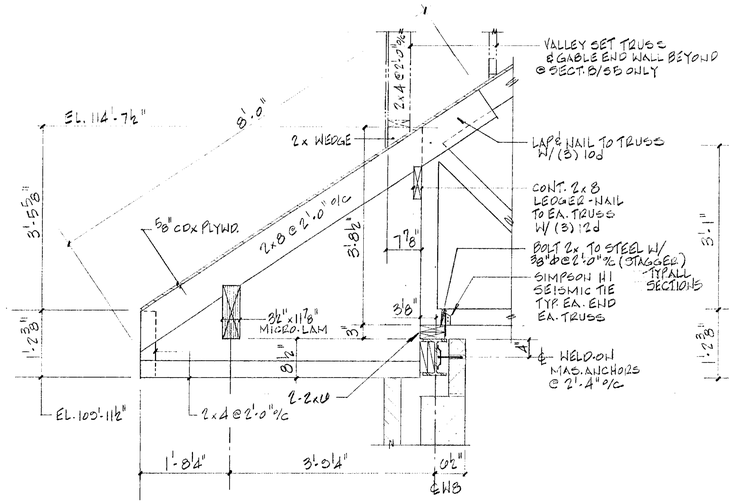

SECTION A/S5 B/S5
SCALE: 3/4" = 1'-0" TYP. U.N.

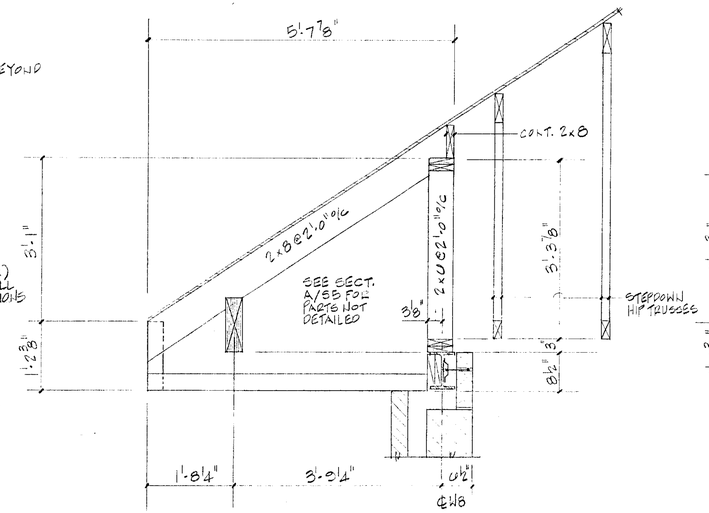

SECTION C/S5

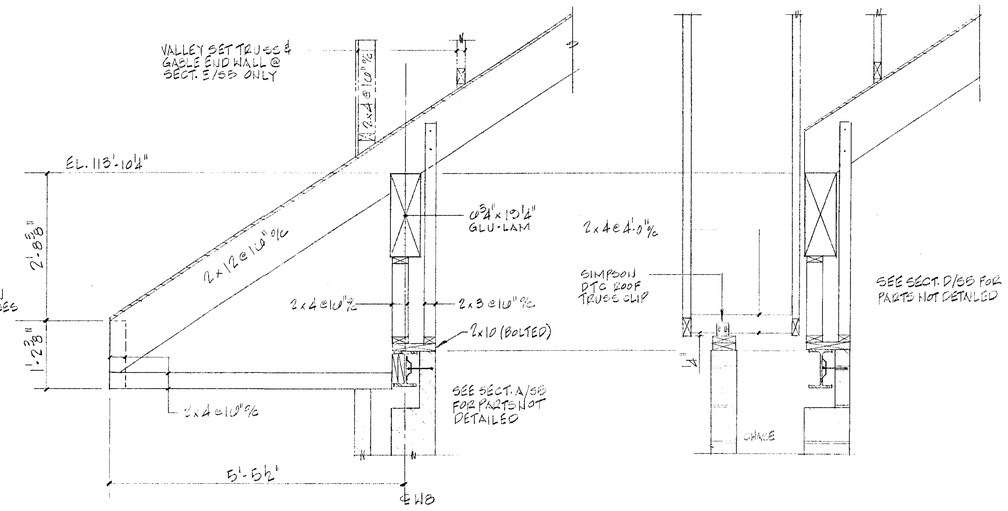

SECTION D/S5 E/S5

SECTION F/S5

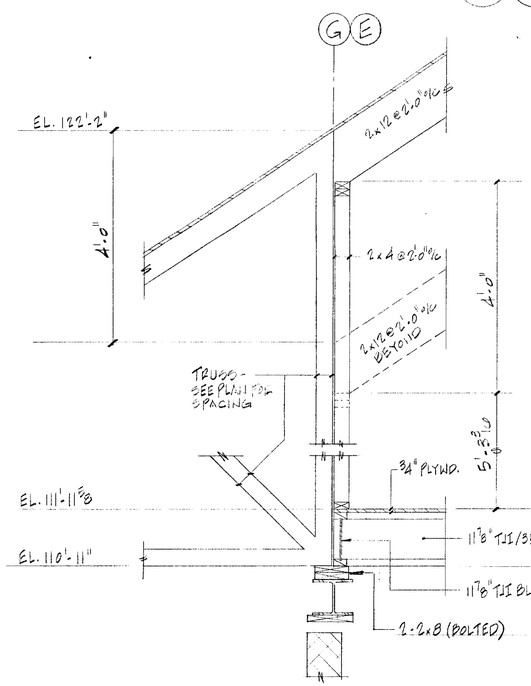

SECTION G/S5

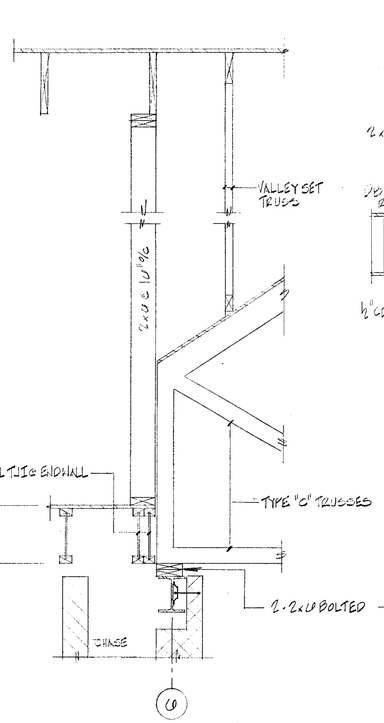

SECTION H/S5

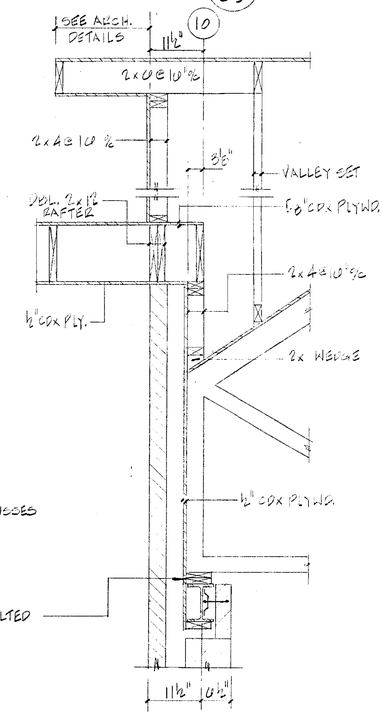

SECTION J/C5

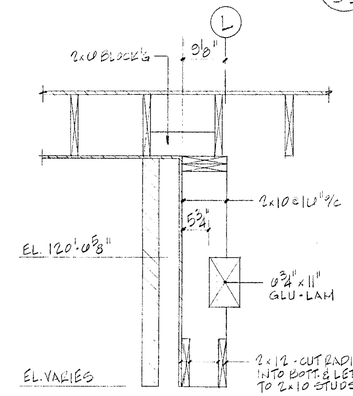

SECTION K/S5

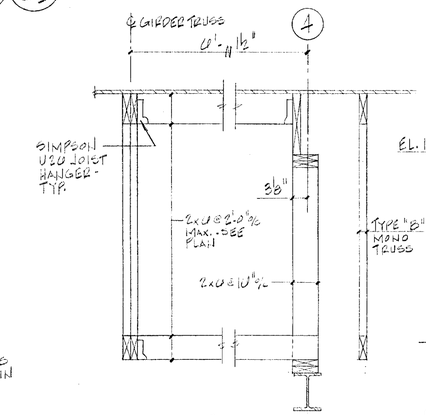

SECTION M/S5

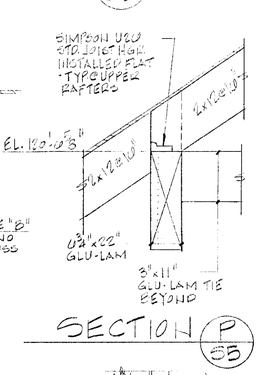

SECTION P/S5

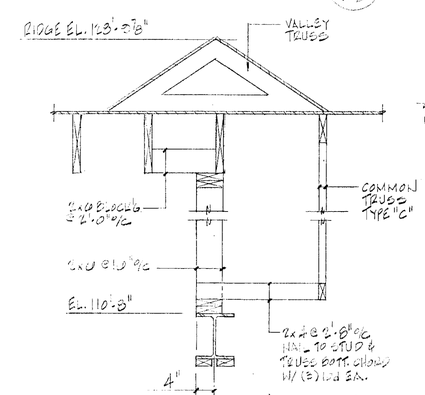

SECTION L/S5

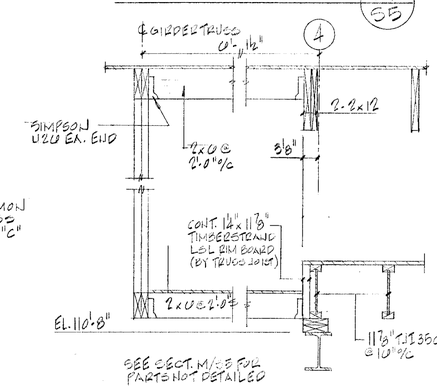

SECTION N/S5

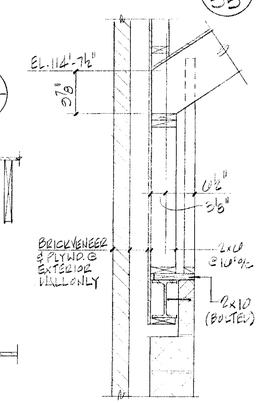

SECTION Q/S5

N·B·F
Nimtz • Berryhill • Figiel
ARCHITECTS P.C.
24 1/2 Center Street Rutland, Vermont 05701

Steven J. Banik, P.E.
STRUCTURAL ENGINEER
Cuttingsville, Vermont 05738

REGISTERED ENGINEER STEVEN J. BANIK NO. 2403 STATE OF VERMONT

DuBois & King INC.
Mechanical and Electrical Consulting Engineers
Rutland, Vermont 05701

SOUTHBOUND I-91
HARTFORD
TRAVEL AND INFORMATION CENTER
HARTFORD, VERMONT
JOB NAME

FRAMING DETAILS II
SHEET TITLE

DATE	ISSUED FOR
10/6/95	OWNER REVIEW
10/31/00	CLIENT REVIEW

S5

15 28