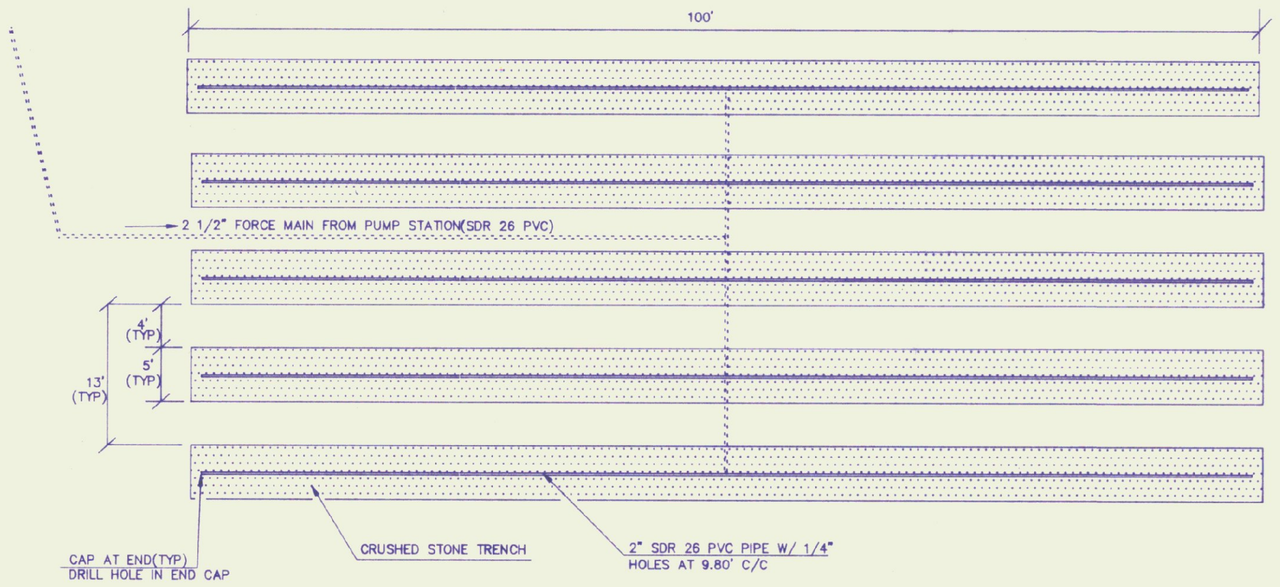

TOP OF MOUND LAYOUT

NOT TO SCALE

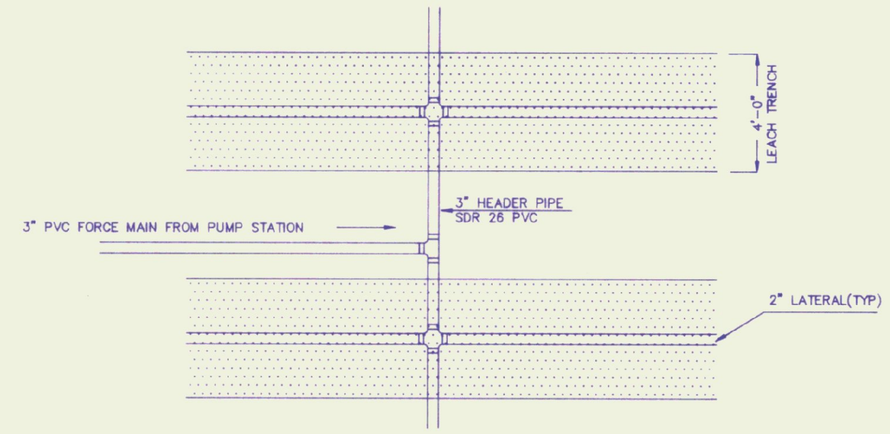

DISTRIBUTION PIPING SCHEMATIC

NOT TO SCALE

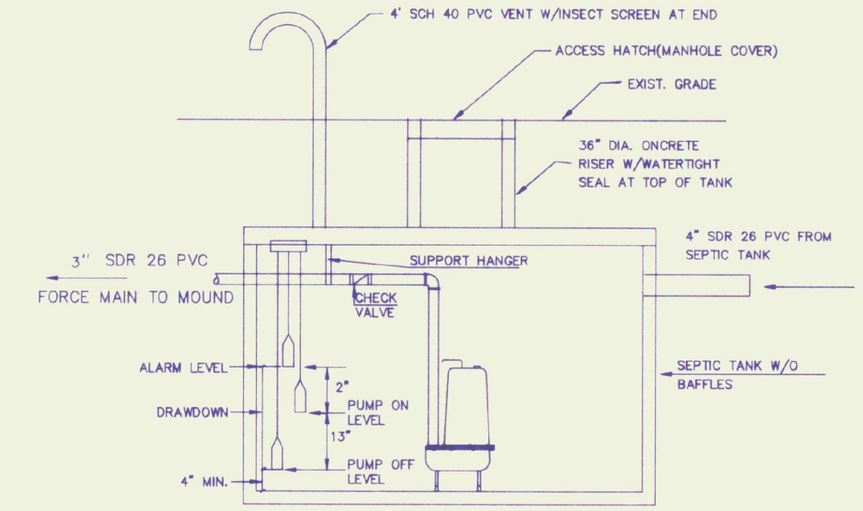

PUMP STATION(USE 1000 GAL PRECAST CONCRETE SEPTIC TANK)

NOT TO SCALE

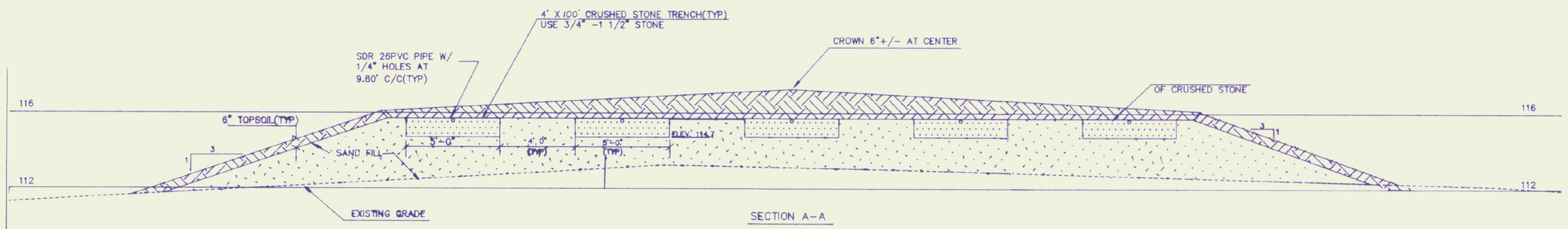

SECTION A-A

1/4"=1'-0"

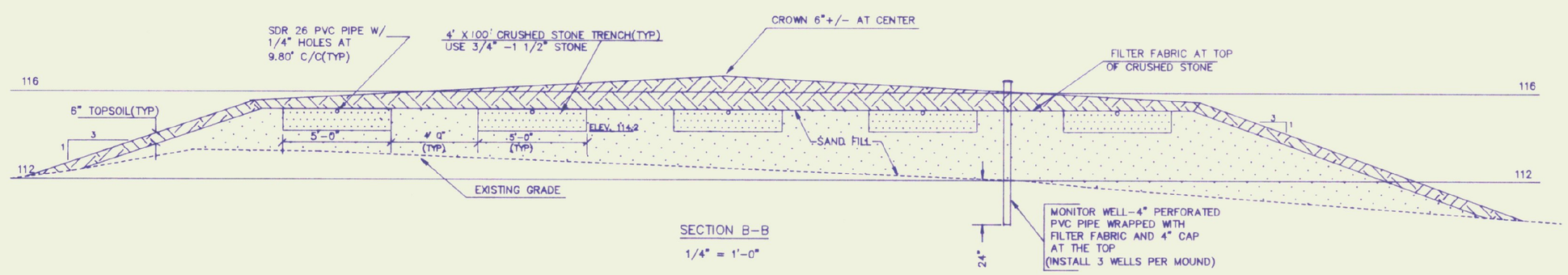

SECTION B-B

1/4" = 1'-0"

PUMP STATION NOTES

1. PUPMS(DUPLEX SYSTEM) TO BE MYERS WHRH10(1 HP) OR EQUAL SUBMERSIBLE.
2. LIQUID LEVELS TO BE CONTROLLED BY MERCURY LEVEL CONTROLS.
3. A VISUAL(LIGHT) ALARM IS TO BE INSTALLED IN THE ELECTRICAL ROOM OF THE BUILDING AND AT THE PUMP STATION.
4. A MANUAL "PUMP ON" SWITCH SHALL BE PROVIDED IN THE BUILDING.
5. THE PUMP STATION SHALL BE TESTED FOR LEAKAGE AND INFILTRATION, EACH OVER A 24 HOUR PERIOD. NO LEAKAGE OR INFILTRATION SHALL BE PERMITTED.
6. ALL ELECTRICAL AND MECHANICAL CONNECTIONS ARE TO BE ACCLOMPLISHED BY LICENSED TRADESMEN.

MOUND SAND MATERIAL SPECIFICATION

SIEVE SIZE	% PASSING
10	85
40	30-50
200	5-10

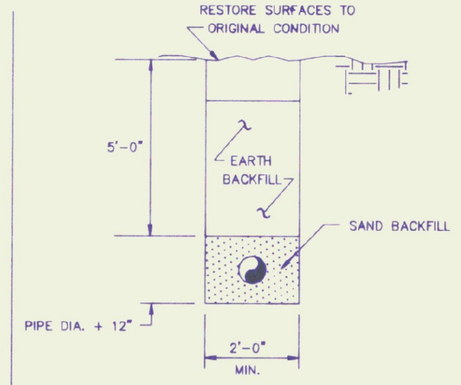

TYPICAL TRENCH SECTION (nts)

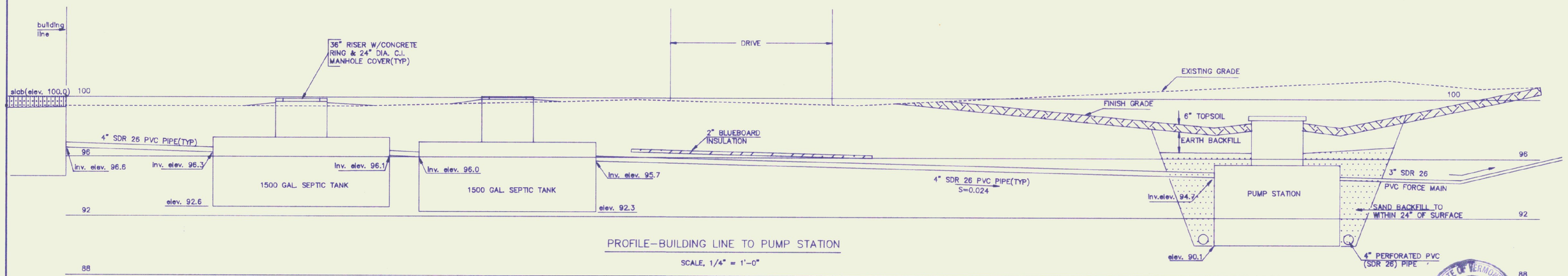

PROFILE-BUILDING LINE TO PUMP STATION

SCALE, 1/4" = 1'-0"

NOTE: THIS SYSTEM IS DESIGNED FOR A FLOW OF 2,000 GALLONS PER DAY IN SOIL WITH A PERCOLATION RATE OF LESS THAN 60 MINUTES PER INCH

ELEVATION OF BASE OF TANKS WILL VARY DEPENDING ON MANUFACTURER. PIPE INVERT ELEVTIONS ARE TO BE FOLLOWED FOLLOWING FIELD VERIFICATION OF PIPE INVERT AS IT LEAVES THE BUILDING.

MINIMUM PIPE SLOPE SHALL BE 1/4" PER FOOT

STATE OF VERMONT WAYNE D. LAWRENCE No. 9 REGISTERED PROFESSIONAL ENGINEER

Wayne D. Lawrence

REVISED 5/08/91, WDL

PROJECT NO. 90097	SHEET 2 OF 2	FILED IN 2-5B
STATE OF VERMONT I-89 NORTH BOUND REST AREA SHARON, VERMONT SEPTIC SYSTEM DESIGN	WAYNE D. LAWRENCE, P.E. BARRE, VERMONT	
	DESIGN: WDL SCALE: AS NOTED APPROVED: WDL DRAWN: WDL SURVEY: N/A DATE: 4/10/91	

C:\DRAW\90097NA