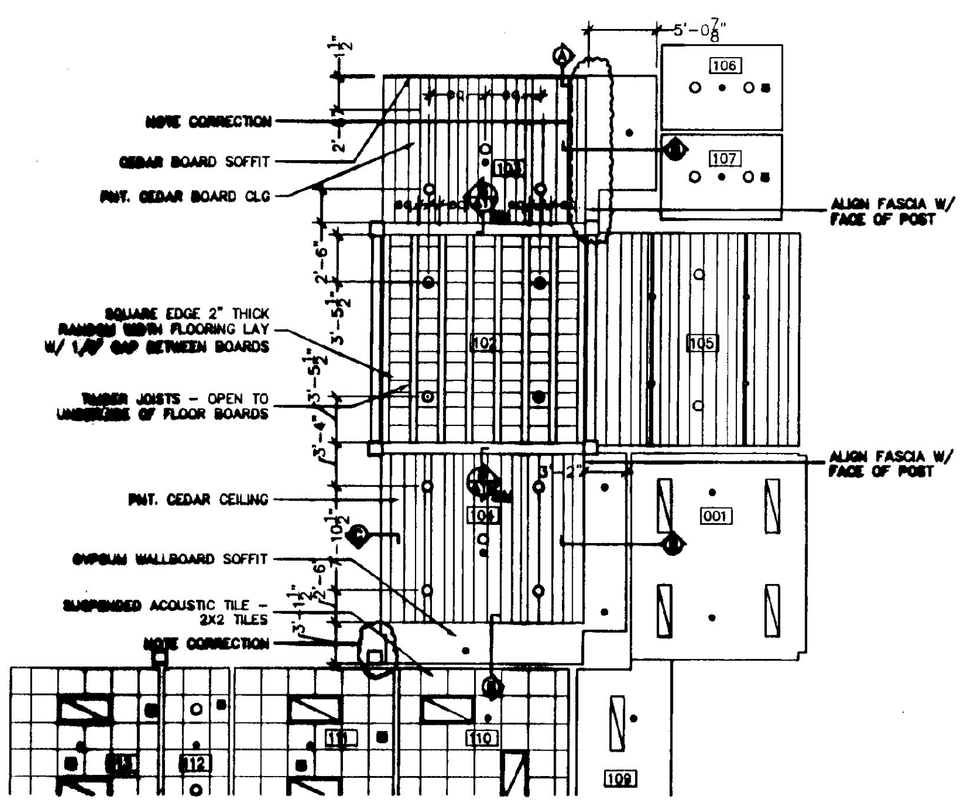

CS-20B

SOUTHEAST VERMONT WELCOME CENTER
GUILFORD VERMONT
SOFFIT CLARIFICATIONS

TIMOTHY D. SMITH & ASSOCIATES, P.C.
OLD RAILROAD STATION
NORTH BENNINGTON
802 442-8184
P.O. BOX 158
VERMONT 05257
FAX 442-5241

JOB NO. 9940.00 | DWN. BY | CK. BY | 1/13/99

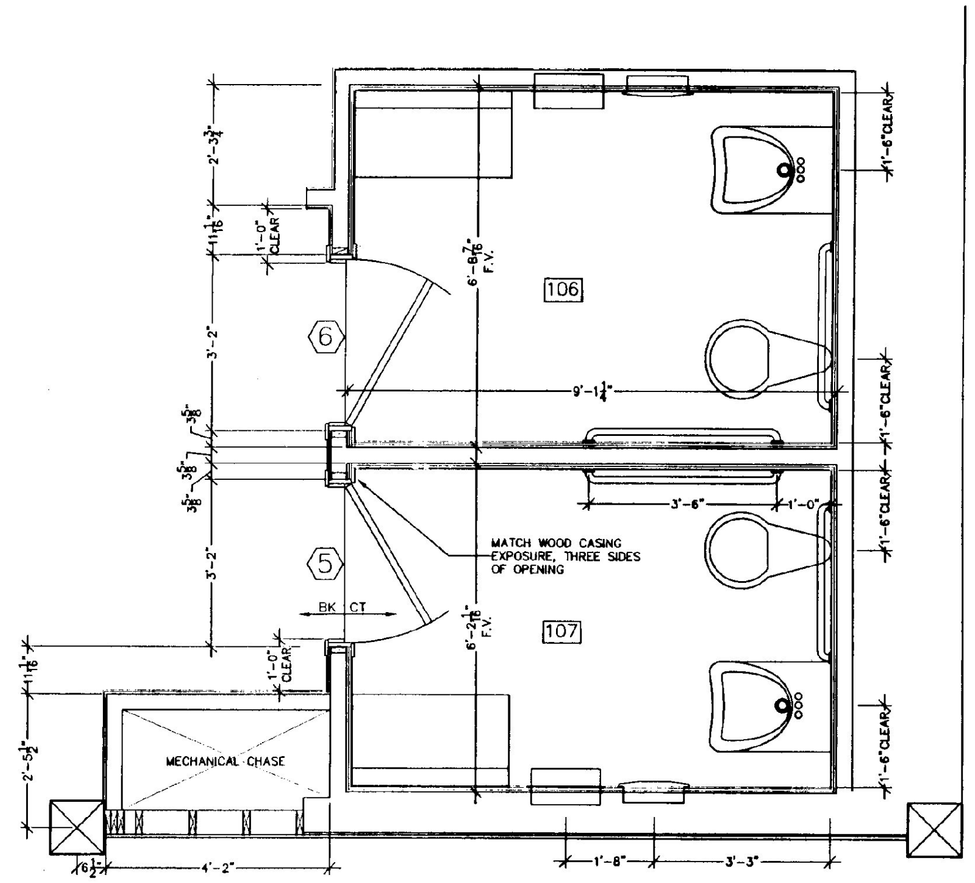

TIMOTHY D. SMITH & ASSOCIATES, P.C.
OLD RAILROAD STATION
NORTH BENNINGTON
802 442-8184
P.O. BOX 158
VERMONT 05257
FAX 442-5241

JOB NO. 9940.00 | DWN. BY | CK. BY | 1/13/99

SOUTHEAST VERMONT WELCOME CENTER
GUILFORD VERMONT
HANDICAP RESTROOM DIMENSIONAL CLARIFICATIONS 1/2" = 1'-0"

CS-21

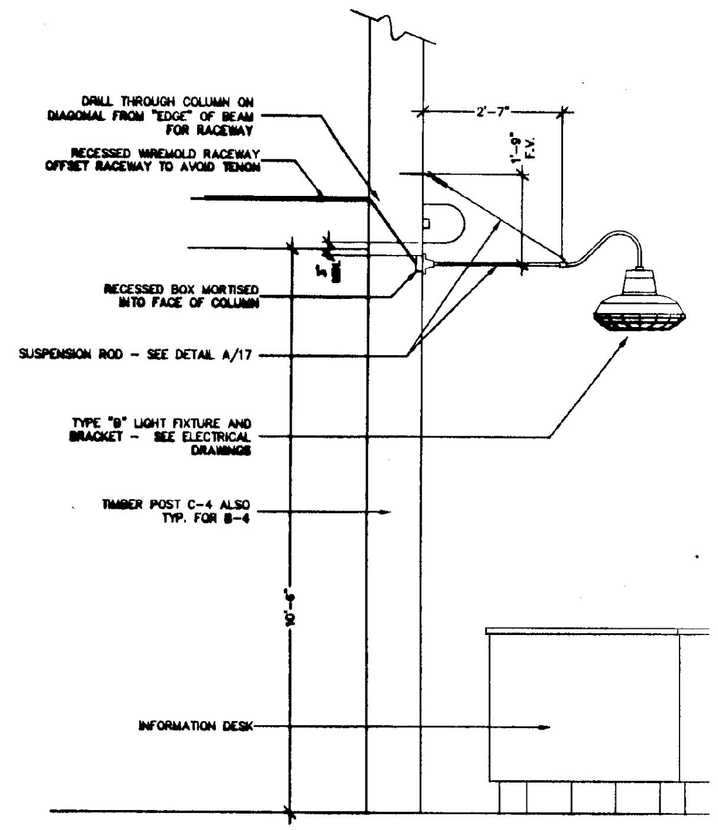

1 PARTIAL ELEVATION
1/2" = 1'-0"

CS-22

SOUTHEAST VERMONT WELCOME CENTER
GUILFORD VERMONT

GOOSENECK FIXTURE TYPE "B" INSTALLATION

TIMOTHY D. SMITH & ASSOCIATES, P.C.
OLD RAILROAD STATION
NORTH BENNINGTON
802 442-8184
P.O. BOX 158
VERMONT 05257
FAX 442-5241

JOB NO. 9940.00 | DWN. BY | CK. BY | 3/14/99

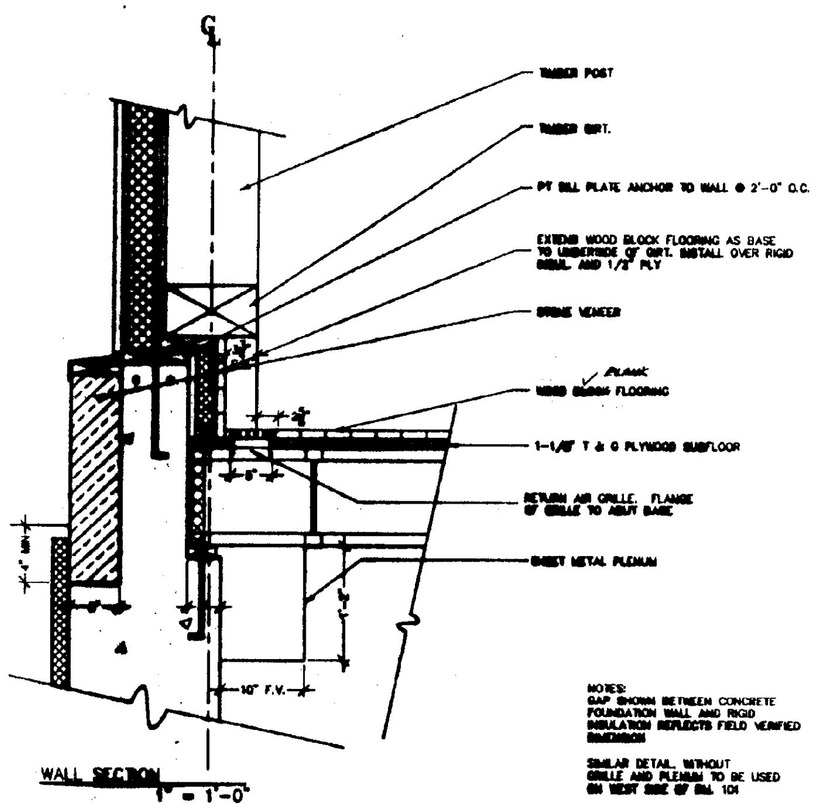

WALL SECTION
1" = 1'-0"

CS-22A

SOUTHEAST VERMONT WELCOME CENTER
GUILFORD VERMONT

FLOOR GRILLE CLARIFICATION

TIMOTHY D. SMITH & ASSOCIATES, P.C.
OLD RAILROAD STATION
NORTH BENNINGTON
802 442-8184
P.O. BOX 158
VERMONT 05257
FAX 442-5241

JOB NO. 9940.00 | DWN. BY | CK. BY | 3/14/99

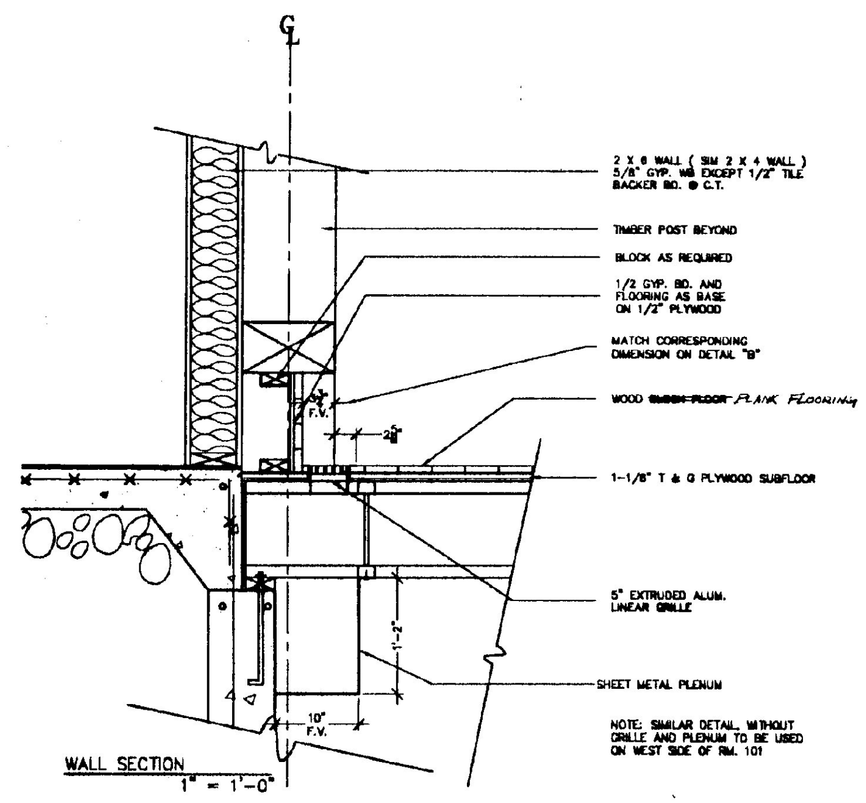

WALL SECTION
1" = 1'-0"

CS-22B

SOUTHEAST VERMONT WELCOME CENTER
GUILFORD VERMONT

FLOOR GRILLE CLARIFICATION

TIMOTHY D. SMITH & ASSOCIATES, P.C.
OLD RAILROAD STATION
NORTH BENNINGTON
802 442-8184
P.O. BOX 158
VERMONT 05257
FAX 442-5241

JOB NO. 9940.00 | DWN. BY | CK. BY | 3/14/99

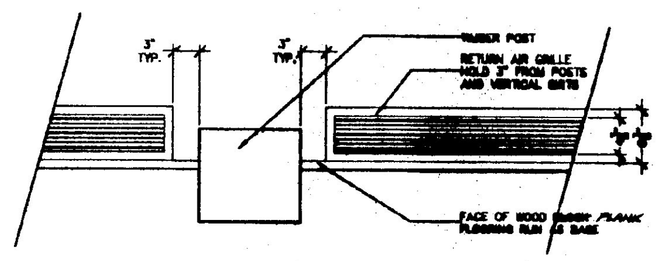

PARTIAL PLAN
1" = 1'-0"

CS-22C

SOUTHEAST VERMONT WELCOME CENTER
GUILFORD VERMONT

FLOOR GRILLE CLARIFICATION

TIMOTHY D. SMITH & ASSOCIATES, P.C.
OLD RAILROAD STATION
NORTH BENNINGTON
802 442-8184
P.O. BOX 158
VERMONT 05257
FAX 442-5241

JOB NO. 9940.00 | DWN. BY | CK. BY | 3/14/99

RECORD DRAWING

NO.	DATE	REVISIONS	DRWN	CHKD

TIMOTHY D. SMITH & ASSOCIATES, PC ARCHITECTS
OLD RAILROAD STATION
802-442-8184
NORTH BENNINGTON, VERMONT 05257
FAX 802-442-5241

WRIGHT ENGINEERING, LTD.
CIVIL ENGINEERS
136 MERCHANTS ROW - P.O. BOX 176
RUTLAND, VERMONT 05702-0176
802-775-2611 FAX 775-8915

ROBT W. HALL
CONSULTING ENGINEERS, INC.
540 MEADOW STREET EXTENSION, STE. 2
AGAWAM, MASSACHUSETTS 01001-0002
413-789-0040 FAX 789-3295

T.J. BOYLE AND ASSOCIATES
LANDSCAPE ARCHITECTS
301 COLLEGE STREET
BURLINGTON, VERMONT 05401
802-858-3555 FAX 863-1562

PROJECT NO.IM 091-1 (30)
SOUTHEAST VERMONT WELCOME CENTER
GUILFORD, VERMONT

SHEET TITLE: DIMENSION CLARIFICATION

DSGN BY:
DRWN BY:
CHKD BY:
CHKD BY:

STATE OF VERMONT
AGENCY OF ADMINISTRATION
DEPARTMENT OF
BUILDINGS & GENERAL SERVICES

DATE: 3-14-2000 SHEET NO._____OF_____SHEETS

AB 6