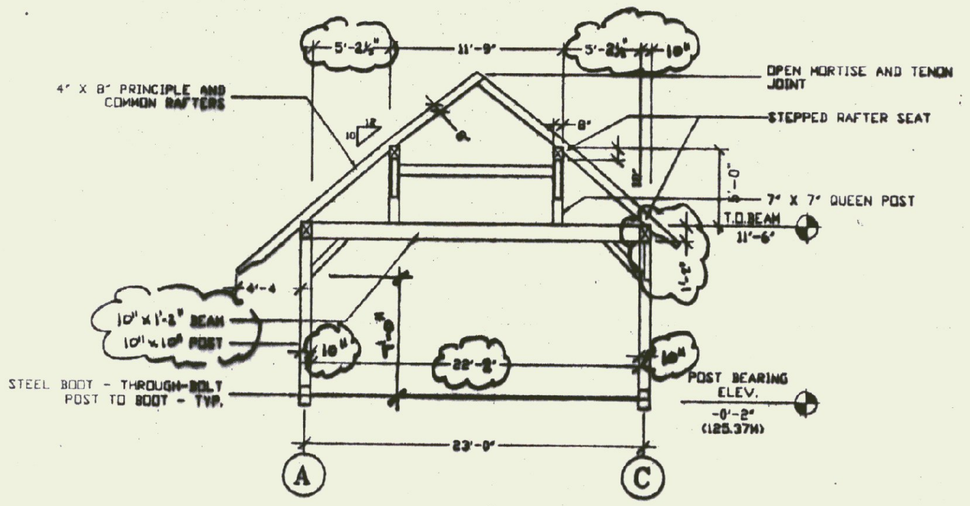

6 PICNIC SHED BUILDING FRAME SECTION 2
1/8" = 1'-0"

TIMOTHY D. SMITH & ASSOCIATES, P.C. NORTH BENNINGTON 802-442-8184 VERMONT 05257 FAX 442-5241	SOUTHEAST VT WELCOME CTR. PICNIC SHED - TIMBER FRAME JOB NO: DATE: 6/16/95	CS 2 A

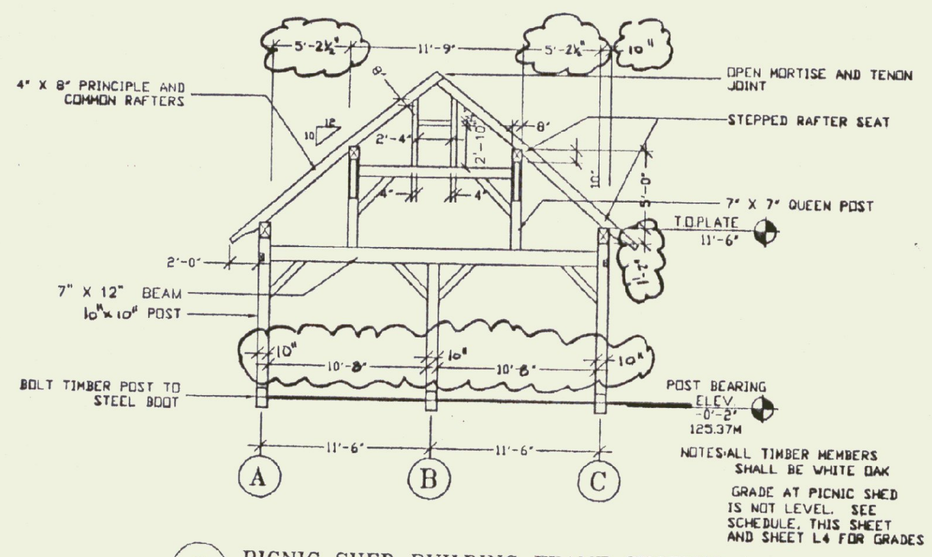

5 PICNIC SHED BUILDING FRAME SECTION 1
1/8" = 1'-0"

TIMOTHY D. SMITH & ASSOCIATES, P.C. NORTH BENNINGTON 802-442-8184 VERMONT 05257 FAX 442-5241	SOUTHEAST VT WELCOME CTR. PICNIC SHED - TIMBER FRAME JOB NO: DATE: 6/16/95	CS 2 B

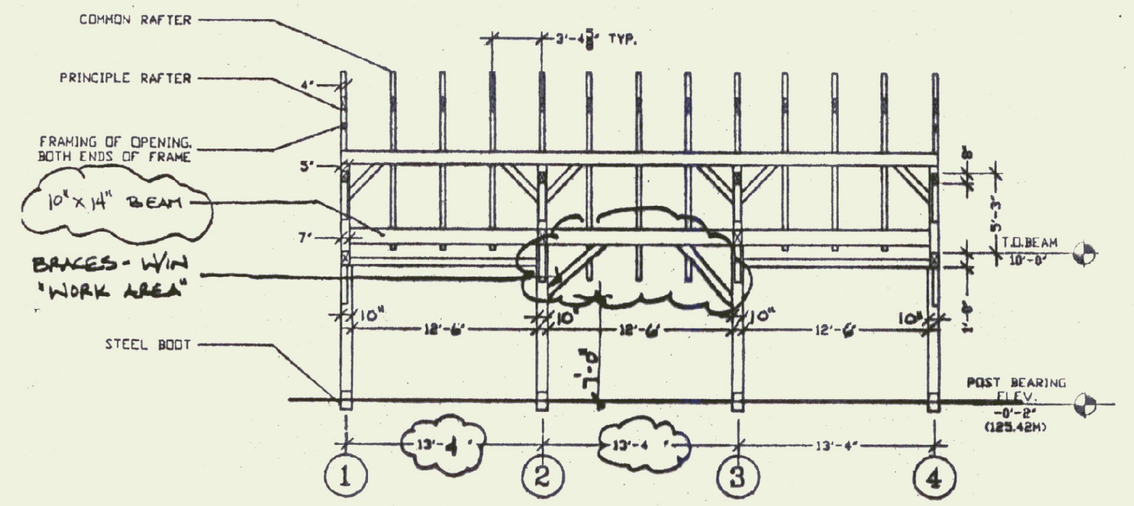

11 PICNIC SHED FRAME SECTION
1/8" = 1'-0"

TIMOTHY D. SMITH & ASSOCIATES, P.C. NORTH BENNINGTON 802-442-8184 VERMONT 05257 FAX 442-5241	SOUTHEAST VT WELCOME CTR PICNIC SHED - TIMBER FRAME JOB NO: DATE: 6/16/95	CS 2 C

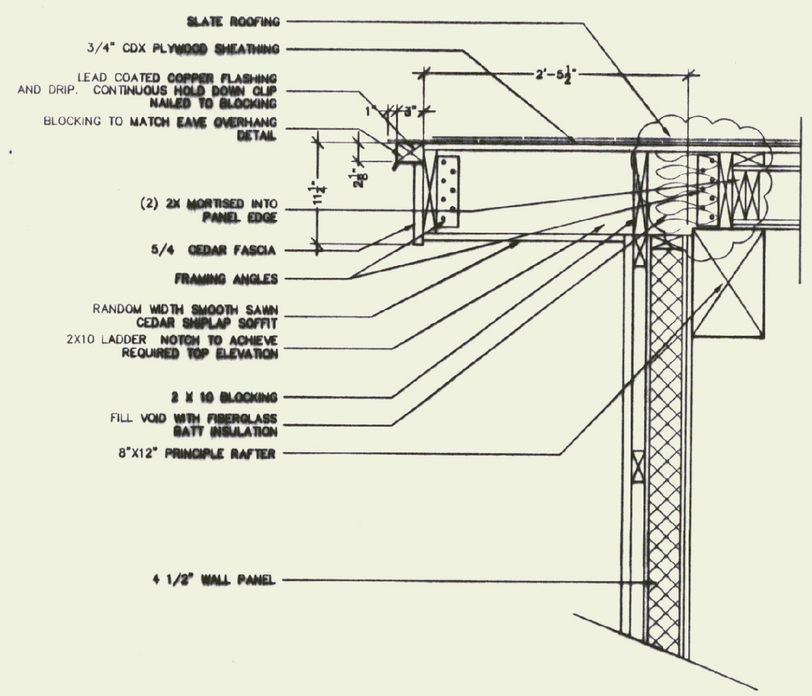

GABLE RAKE SECTION - (REVISED DRAWINGS 6/A7)
1" = 1'-0"

CS-3	SOUTHEAST VERMONT WELCOME CENTER GUILFORD VERMONT FRAMING ANGLE CLARIFICATION	TIMOTHY D. SMITH & ASSOCIATES, P.C. OLD RAILROAD STATION NORTH BENNINGTON 802 442-8184 P.O. BOX 188 VERMONT 05257 FAX 442-5241

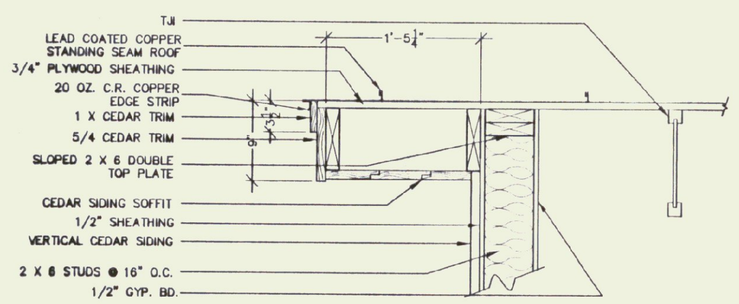

SHED ROOF RAKE DETAIL
SCALE: 1" = 1'-0"

CS-4	SOUTHEAST VERMONT WELCOME CENTER GUILFORD VERMONT SHED ROOF RAKE DETAIL	TIMOTHY D. SMITH & ASSOCIATES, P.C. OLD RAILROAD STATION NORTH BENNINGTON 802 442-8184 P.O. BOX 188 VERMONT 05257 FAX 442-5241

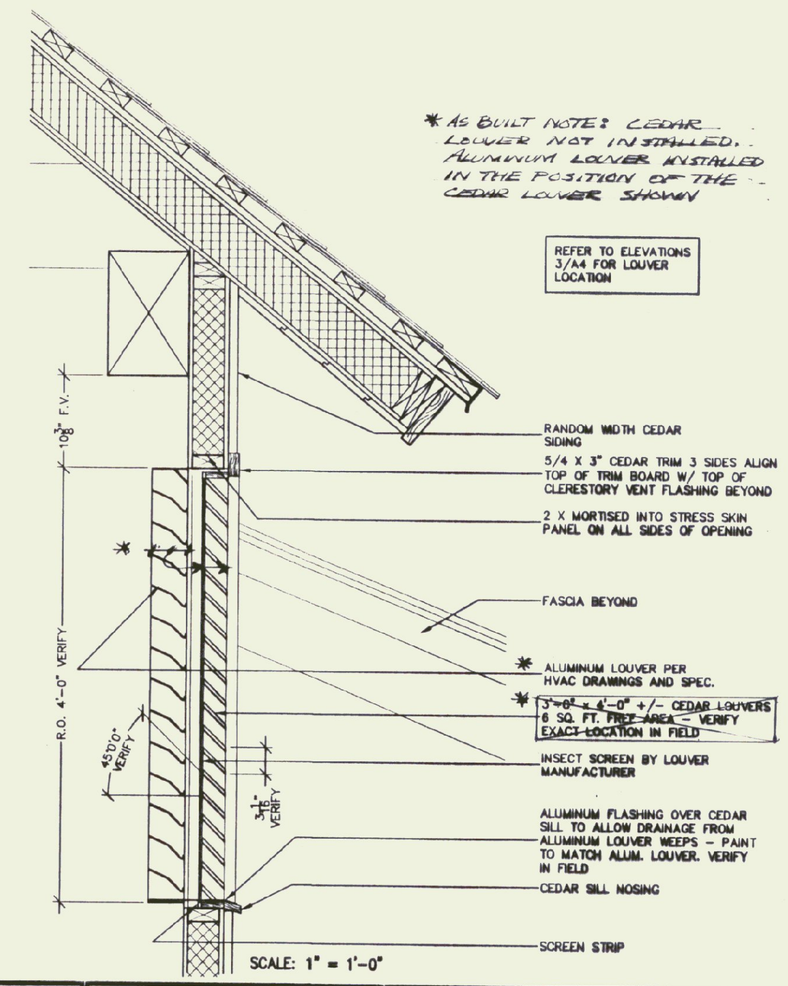

SCALE: 1" = 1'-0"

CS-5	SOUTHEAST VERMONT WELCOME CENTER GUILFORD VERMONT FRESH AIR LOUVER DETAIL	TIMOTHY D. SMITH & ASSOCIATES, P.C. OLD RAILROAD STATION NORTH BENNINGTON 802 442-8184 P.O. BOX 188 VERMONT 05257 FAX 442-5241

RECORD DRAWING

NO.	DATE	REVISIONS	DRWN	CHKD

TIMOTHY D. SMITH & ASSOCIATES, PC ARCHITECTS
OLD RAILROAD STATION 802-442-8184
NORTH BENNINGTON, VERMONT 05257 FAX 802-442-5241

WRIGHT ENGINEERING, LTD. CIVIL ENGINEERS
128 MERCHANTS ROW - P.O. BOX 176 RUTLAND, VERMONT 05702-0176 802-775-2511 FAX 775-8915

ROBT W. HALL CONSULTING ENGINEERS, INC.
540 MEADOW STREET EXTENSION, STE. 2 AGAWAM, MASSACHUSETTS 01001-0002 413-789-0860 FAX 789-3295

T.J. BOYLE AND ASSOCIATES LANDSCAPE ARCHITECTS
301 COLLEGE STREET BURLINGTON, VERMONT 05401 802-658-3555 FAX 863-1562

PROJECT NO.IM 091-1 (30)
SOUTHEAST VERMONT WELCOME CENTER
GUILFORD, VERMONT

SHEET TITLE: DIMENSION CLARIFICATION

DSGN BY:
DRWN BY:
CHKD BY:
CHKD BY:

STATE OF VERMONT
AGENCY OF ADMINISTRATION
DEPARTMENT OF BUILDINGS & GENERAL SERVICES

DATE: 3-14-2000 SHEET NO._____ OF _____ SHEETS

AB 2