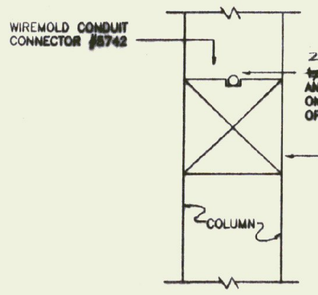

DETAIL AT INTERSECTION OF BEAMS

NOT TO SCALE

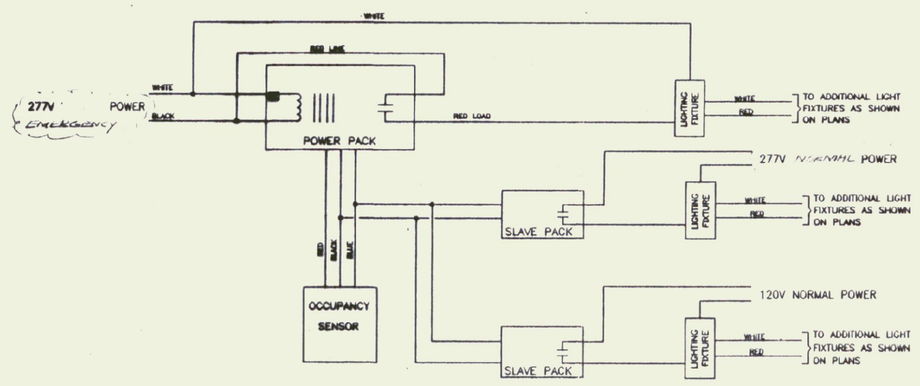

NOTES

1. THE ELECTRICAL CONTRACTOR SHALL MOUNT THE POWER PACK TO A 4" SQUARE JUNCTION BOX WITH A BLANK PLATE AND WIRE AS SHOWN. THE JUNCTION BOX COVER SHALL BE PERMENANTLY ATTACHED TO THE JUNCTION BOX BY MEANS OF A CHAIN OR CABLE. LABEL THE COVER "OCC. SENSOR PWR PACK – AND PANEL NAME AND CIRCUIT".
2. THE ELECTRICAL CONTRACTOR SHALL MOUNT THE SLAVE PACK TO A 4" SQUARE JUNCTION BOX WITH A BLANK PLATE AND WIRE AS SHOWN. THE JUNCTION BOX COVER SHALL BE PERMENANTLY ATTACHED TO THE JUNCTION BOX BY MEANS OF A CHAIN OR CABLE. LABEL THE COVER "SLAVE PACK – AND PANEL NAME AND CIRCUIT".
3. THE ELECTRICAL CONTRACTOR SHALL FIELD ADJUST THE OFF TIME DELAY AND SENSOR SENSITIVITY AS DIRECTED BY THE OWNER.

OCCUPANCY SENSOR TOILET WIRING DIAGRAM

NOT TO SCALE

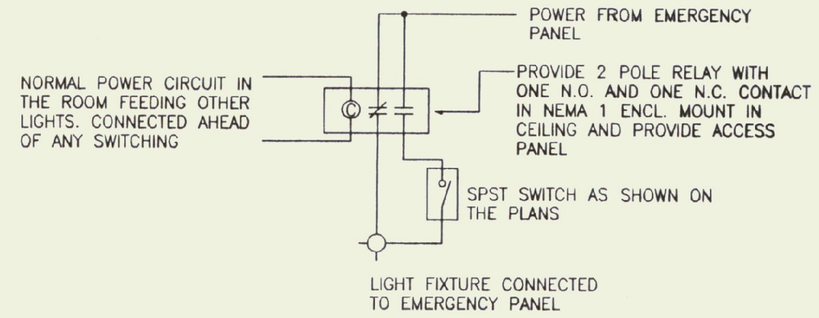

TYPICAL WIRING FOR LIGHTS CONNECTED TO EMERGENCY PANEL POWER

NOT TO SCALE

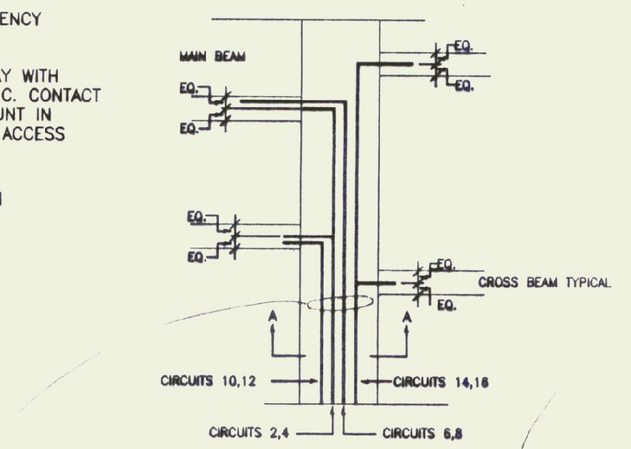

LAYOUT DETAIL

NOT TO SCALE

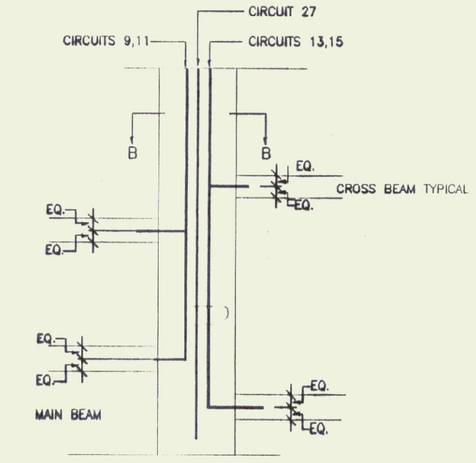

LAYOUT DETAIL

NOT TO SCALE

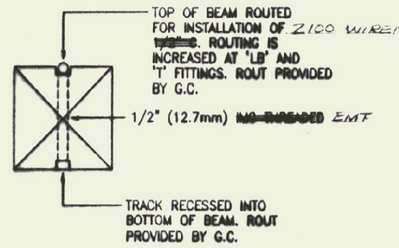

SECTION OF BEAM

NOT TO SCALE

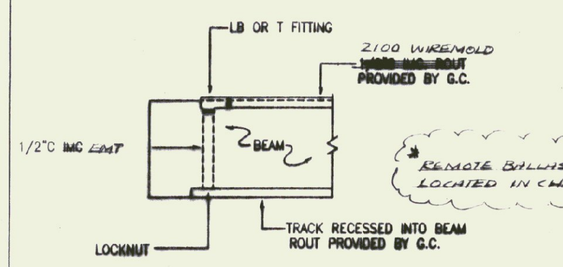

SIDE VIEW OF BEAM

NOT TO SCALE

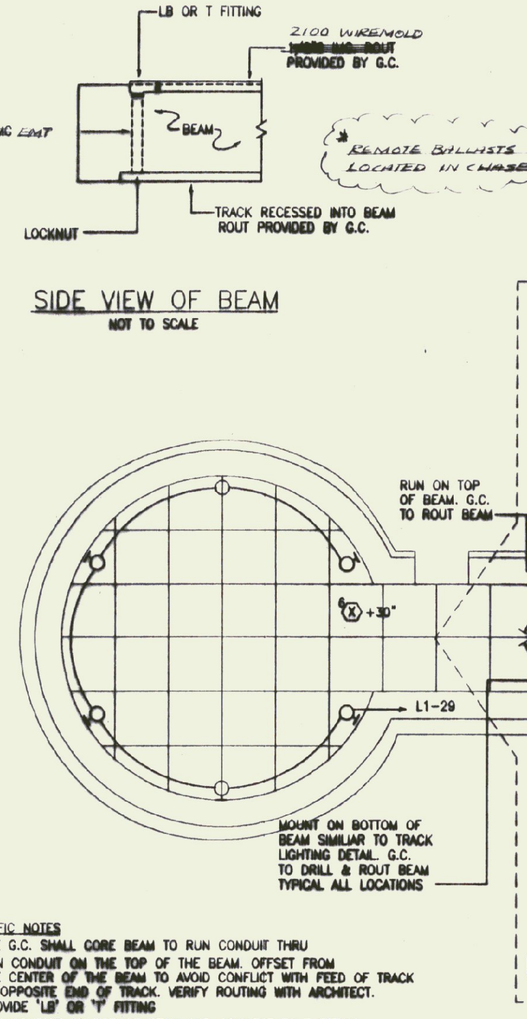

SPECIFIC NOTES

1. THE G.C. SHALL CORE BEAM TO RUN CONDUIT THRU
2. RUN CONDUIT ON THE TOP OF THE BEAM. OFFSET FROM THE CENTER OF THE BEAM TO AVOID CONFLICT WITH FEED OF TRACK AT OPPOSITE END OF TRACK. VERIFY ROUTING WITH ARCHITECT.
3. PROVIDE 'LB' OR 'T' FITTING
4. RUN CONDUIT ON TOP OF BEAM AND CONNECT TO T FITTING THAT FEEDS TRACK CONNECTED TO CIRCUIT 8 OR 10
5. PROVIDE TWO DIMMER CONTROL STATIONS. PROVIDE SPACING PER MANUF. V.L. AND SPST SWITCH TO CONTROL LIGHTING CONTACTOR FOR UPPER LEVEL LTS
6. TWO CONDUITS RUN ON TOP OF BEAM AT THIS LOCATION FOR CIRCUITS 2 AND 6,8. SEE DETAIL FOR LAYOUT OF CONDUITS
7. FOUR CONDUITS RUN ON TOP OF BEAM AT THIS LOCATION FOR ALL CIRCUITS FEEDING TRACK LIGHTS. SEE DETAIL FOR LAYOUT OF CONDUITS ON THIS SHEET.
8. PROVIDE TWO (2) SPST SWITCHES FOR SWITCH LEGS a + b
   PROVIDE ONE (1) SPST SWITCHES FOR SWITCH LEG e
   PROVIDE ONE (1) SPST SWITCH FOR SWITCH LEG c
   PROVIDE TWO (2) SPST SWITCHES FOR SWITCH LEGS d + f
   PROVIDE ONE (1) SPST SWITCH FOR SWITCH LEG g
   PROVIDE SINGLE GANGED BOX AND ENGRAVED PLATE SEE DETAIL THIS SHEET.
9. TO SWITCH d IN CORRIDOR. SEE SPECIFIC NOTE 8 ABOVE
10. TO SWITCH f IN CORRIDOR. SEE SPECIFIC NOTE 8 ABOVE
11. PROVIDE TWO (2) REMOTE MOUNT BALLASTS IN ACCESSIBLE CEILING SPACE. MAINTAIN MINIMUM OF 18" SPACING BETWEEN BALLASTS. LABEL EACH BALLAST W/ FIXTURE SERVED AND POWER SOURCE. ie ROW 1, EAST BALLAST, NORMAL PWR; ROW 1, CTR BALLAST, EMERGENCY PWR, etc... SEE DIAGRAM THIS SHEET FOR COMPLETE WIRING REQUIRED AT THIS LOCATION. TYPICAL FOR FOUR (4) LOCATIONS

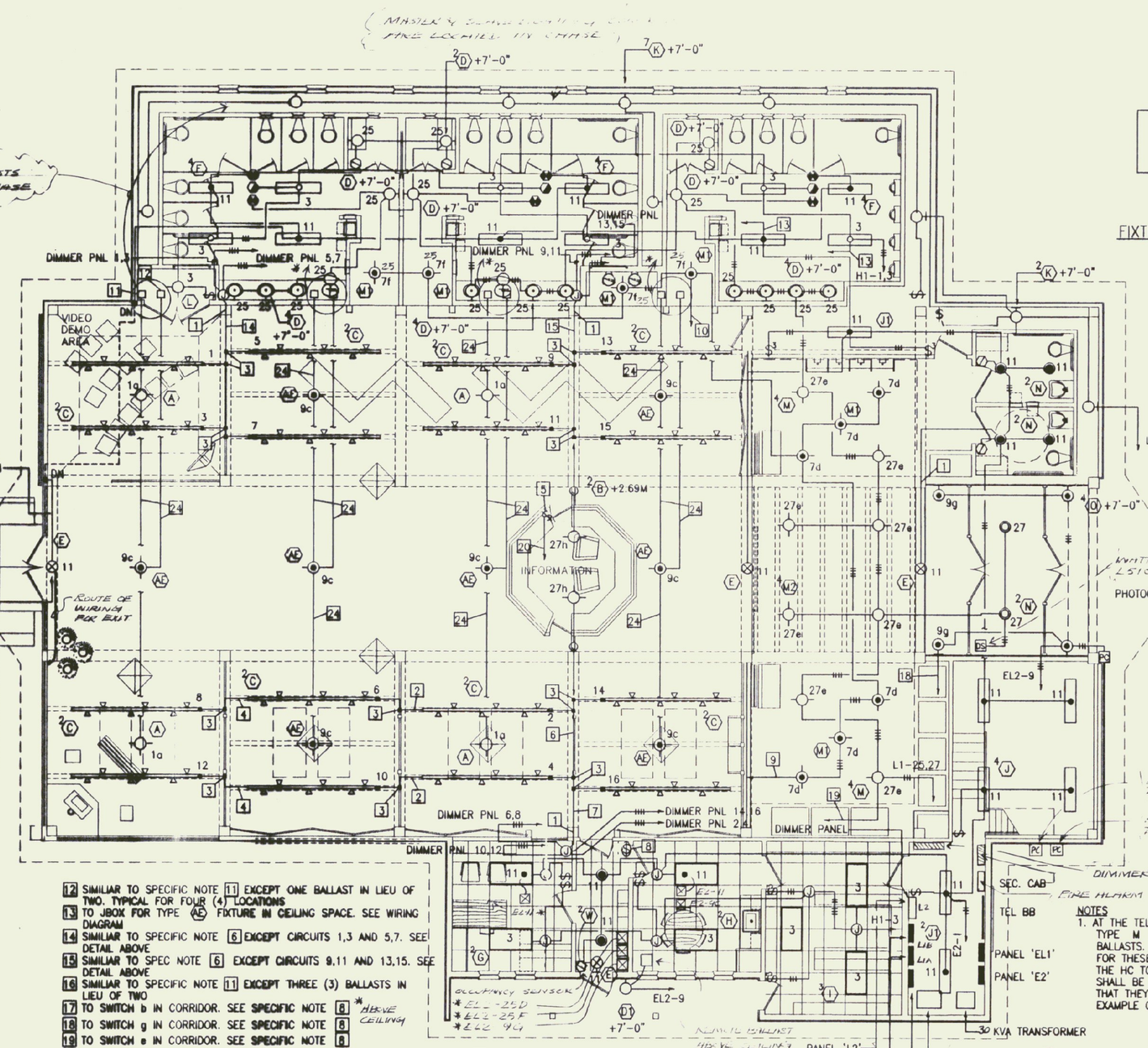

12 SIMILAR TO SPECIFIC NOTE 11 EXCEPT ONE BALLAST IN LIEU OF TWO. TYPICAL FOR FOUR (4) LOCATIONS
13 TO J-BOX FOR TYPE AE FIXTURE IN CEILING SPACE. SEE WIRING DIAGRAM
14 SIMILAR TO SPECIFIC NOTE 6 EXCEPT CIRCUITS 1,3 AND 5,7. SEE DETAIL ABOVE
15 SIMILAR TO SPEC NOTE 6 EXCEPT CIRCUITS 9,11 AND 13,15. SEE DETAIL ABOVE
16 SIMILAR TO SPECIFIC NOTE 11 EXCEPT THREE (3) BALLASTS IN LIEU OF TWO
17 TO SWITCH b IN CORRIDOR. SEE SPECIFIC NOTE 8
18 TO SWITCH g IN CORRIDOR. SEE SPECIFIC NOTE 8
19 TO SWITCH e IN CORRIDOR. SEE SPECIFIC NOTE 8
20 PROVIDE 3/4"C WITH 4 # 12. TYPICAL FOR THREE AT THIS LOCATION
21 PROVIDE TWO RUNS OF WIREMOLD. ONE TO FEED SINGLE FIXTURE AND THE SECOND TO FEED TWO FIXTURES. RUN ON OPPOSITE SIDES OF BEAM SIMILAR TO DETAIL ON THIS SHEET FOR NORMAL & EMER. FIXTURES.
22 PROVIDE TWO 1"C CONDUITS EACH WITH 22 #18 CONDUCTORS IN EACH TO THE DIMMER CONTROL PANEL. INSTALL PER MANUF. WIRING DIAGRAM.
23 NOT USED
24 PROVIDE WIREMOLD WITH # OF CONDUCTORS REQUIRED. SEE WIRING DIAGRAM THIS SHEET

LIGHTING PLAN

SCALE: 1/8"=1'-0"

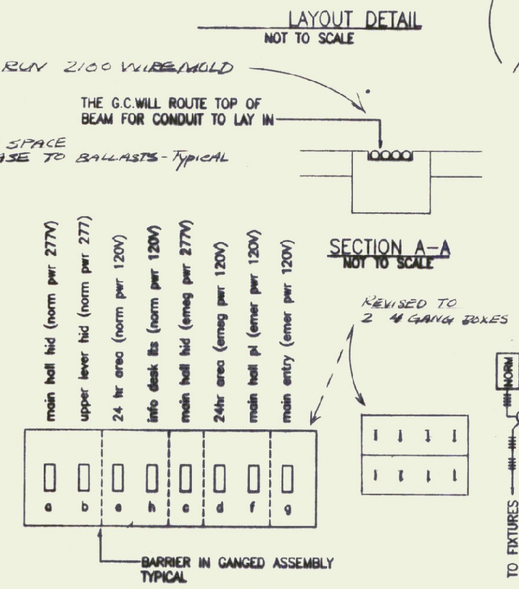

FIXTURE MOUNTING DETAIL

NOT TO SCALE

SWITCH BANK IN CORRIDOR

NOT TO SCALE

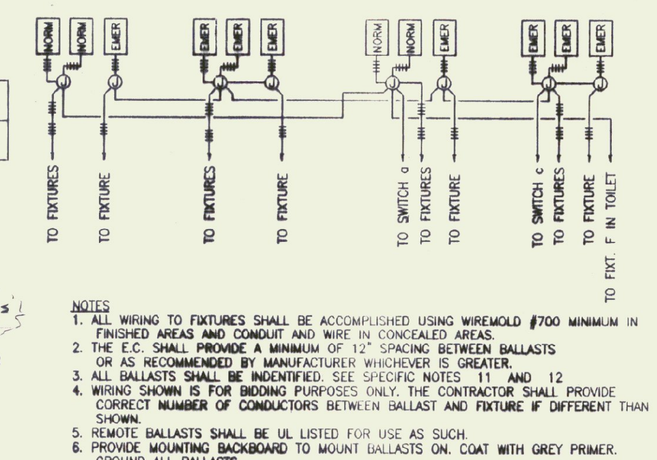

NOTES

1. ALL WIRING TO FIXTURES SHALL BE ACCOMPLISHED USING WIREMOLD #700 MINIMUM IN FINISHED AREAS AND CONDUIT AND WIRE IN CONCEALED AREAS.
2. THE E.C. SHALL PROVIDE A MINIMUM OF 12" SPACING BETWEEN BALLASTS OR AS RECOMMENDED BY MANUFACTURER WHICHEVER IS GREATER.
3. ALL BALLASTS SHALL BE INDENTIFIED. SEE SPECIFIC NOTES 11 AND 12
4. WIRING SHOWN IS FOR BIDDING PURPOSES ONLY. THE CONTRACTOR SHALL PROVIDE CORRECT NUMBER OF CONDUCTORS BETWEEN BALLAST AND FIXTURE IF DIFFERENT THAN SHOWN.
5. REMOTE BALLASTS SHALL BE UL LISTED FOR USE AS SUCH.
6. PROVIDE MOUNTING BACKBOARD TO MOUNT BALLASTS ON. COAT WITH GREY PRIMER. GROUND ALL BALLASTS.

REMOTE BALLAST WIRING DIAGRAM

NOT TO SCALE

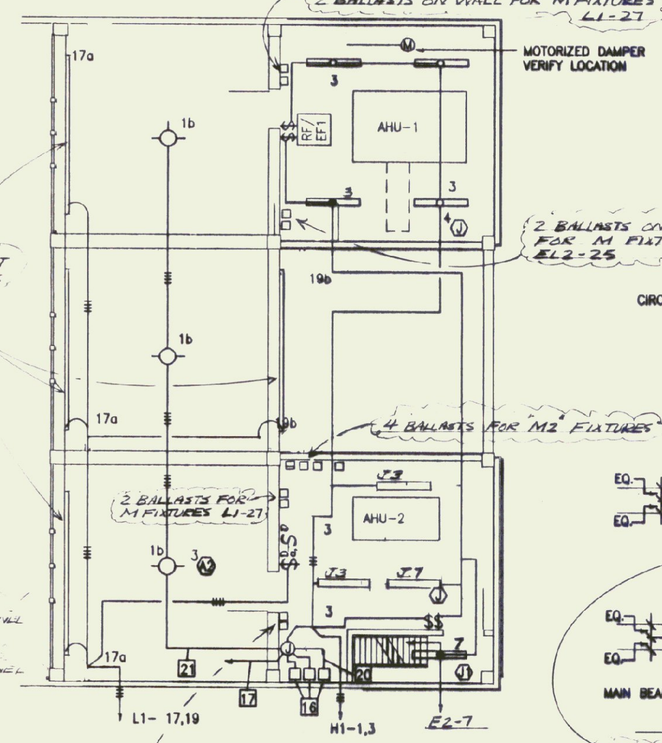

UPPER LEVEL LIGHTING PLAN

2 BALLASTS FOR "M" FIXTURES EL2-25

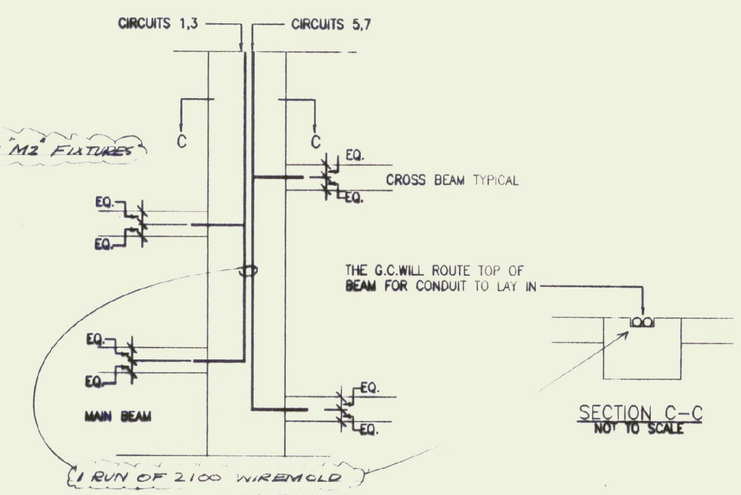

LAYOUT DETAIL

NOT TO SCALE

SECTION C–C

NOT TO SCALE

NOTES

1. AT THE TELEPHONE AND VENDING AREAS THE TYPE M FIXTURES ARE SUPPLIED WITH REMOTE BALLASTS. THE E.C. SHALL LOCATE THE BALLASTS FOR THESE FIXTURES IN THE MECH. SPACES ABOVE THE HC TOILETS AND MECH ROOM. ALL BALLASTS SHALL BE IDENTIFIED FOR USE WITH THE FIXTURE THAT THEY SERVE. SEE SPECIFIC NOTE 11 FOR EXAMPLE OF IDENTIFICATION REQUIRED.

RECORD DRAWING

SCALE: 1/8"= 1'-0"

NO.	DATE	REVISIONS	DRWN	CHKD

TIMOTHY D. SMITH & ASSOCIATES, PC ARCHITECTS
OLD RAILROAD STATION
802-442-8184
NORTH BENNINGTON, VERMONT 05257
FAX 802-442-5241

WRIGHT ENGINEERING, LTD.
CIVIL ENGINEERS
128 MERCHANTS ROW – P.O. BOX 176
RUTLAND, VERMONT 05702-0176
802-775-2511 FAX 775-8015

ROBT W. HALL
CONSULTING ENGINEERS, INC.
540 MEADOW STREET EXTENSION, STE. 2
AGAWAM, MASSACHUSETTS 01001-0002
413-789-0960 FAX 789-3295

T.J. BOYLE AND ASSOCIATES
LANDSCAPE ARCHITECTS
301 COLLEGE STREET
BURLINGTON, VERMONT 05401
802-658-3555 FAX 863-1562

STATE OF VERMONT ROBERT W. HALL No. 2208 REGISTERED PROFESSIONAL ENGINEER 1-16-98

PROJECT NO.IM 091-1 (30)
SOUTHEAST VERMONT WELCOME CENTER
GUILFORD, VERMONT

SHEET TITLE: BLDG ILIGHTING PLAN + OUT BUILDING ELECTRICAL PLANS

DSGN BY: MLB
DRWN BY: MLB
CHKD BY: RWH
CHKD BY:

STATE OF VERMONT
AGENCY OF ADMINISTRATION
DEPARTMENT OF
BUILDINGS & GENERAL SERVICES

DATE: 01-16-98 SHEET NO.____ OF ____ SHEETS

E-3