AIR HANDLING UNIT SCHEDULE

UNIT NO.	MANUFACTURER & MODEL NO.	FAN	CFM	O.A. CFM	EXT. S.P. "H20	ELECTRIC DATA H.P.	VAC	Hz.	PH.	HEATING COIL DATA MBH	EAT °F	LAT °F	MIN. Sq. FT	ROWS FINS	Air PD "H20	WPD FT HD	GPM	COOLING COIL DATA TOT. MBH	SENS. MBH	LAT. MBH	ENT. DB °F	ENT. WB °F	LVG. DB °F	LVG. WB °F	MIN. SQ. FT	FPM	AIR PD " H20	SST	AREA SERVED	UNIT WEIGHT LBS.	REMARKS	DESCRIPTION
1	CARRIER 39LF-15	SUPPLY	6530	1575	0.75	5	460	60	3	363.5	49	101	12.2	2/11	0.28	7.0	36.4	211.2	166.8	44.4	78.6	64.4	54.4	53.1	12.2	530	0.75		EXHIBIT/TOILET ROOMS		BASE RAIL, VERTICAL DRAW-THRU	WITH ANGLE FILTER SECTION
2	CARRIER 39LF-03	SUPPLY	1100	200	.75	.75	460	60	3	58.6	52.8	103	2.75	2/8	0.14	1.0	5.9	27.6	21.6	6.0	78.1	66.5	59.6	58.5	2.75	400	0.50		24 HOUR AREAS		BASE RAIL, HORIZONTAL DRAW-THRU	WITH ANGLE FILTER SECTION

AIR COOLED CONDENSING UNIT SCHEDULE ①②

MARK	NO. REQ'D	AREA SERVED	MCA	MCOP	NOMINAL CAPACITY BTU/HR	EER	COMPRESSOR MOTOR NUMBER	VOLTS	PHASE	MANUFACTURER MODEL NUMBER
CU 1	1	AHU-1	48.1	80	240,000	10.7	2	460	3	CARRIER 38 AKS024
CU 2	1	AHU-2	19.9	30	30,000	10.7	1	208	1	CARRIER 38 CM030

① REFRIGERANT R-22
② AT ARI DESIGN CONDITIONS OF 45 SST AND 95° AMB.

BOILER & BURNER SCHEDULE

BOILER NO.	MANUFACTURER & MODEL: BOILER	BURNER	GROSS INPUT BTU/HR	GROSS OUTPUT BTU/HR	FUEL INPUT: GAS	OIL	ELEC: VAC	PH	AMPS
B-1	TRIANCO CB250		250,000	233,000	250 CFH		120	1	15
B-2	TRIANCO CB250		250,000	233,000	250 CFH		120	1	15
B-3	TRIANCO CB250		250,000	233,000	250 CFH		120	1	15

DIFFUSER/REGISTER/GRILLE SCHEDULE

CD-1	RECTANGULAR OR SQUARE 4 WAY BLOW DIFFUSER W/THD DIFFUSER FACE SHALL BE FACTORY FINISHED WHITE. THE DIFFUSER SHALL BE OF STEEL CONSTRUCTION MAX NC LEVEL SHALL BE 25, THE MAXIMUM PRESSURE DROP SHALL BE 0.07"WG, TITUS MODEL TDC OR EQUAL
CG-1	ALUMINUM EGGCRATE GRILLE, 1/2" X 1/2" X 1/2" ALUMINUM CORE , BORDER TYPE 1 FOR SURFACE MOUNT MAX NC LEVEL SHALL BE 25, THE MAXIMUM PRESSURE DROP SHALL BE 0.05"WG, TITUS MODEL 50F
CR-1	SAME AS THE GRILLE BUT WITH AN OPPOSED BLADE DAMPER
SG-1	LINEAR ALUMINUM GRILLE WITH ANODIZED FINISH BARS SPACED @1/2" 1/8" BARS, BORDER TYPE 5 HEAVY DUTY MAX NC LEVEL SHALL BE 25, THE MAXIMUM PRESSURE DROP SHALL BE 0.05"WG, TITUS MODEL CT-580
SR-1	STEEL SIDEWALL DOUBLE DEFLECTION AIRFOIL REGISTER, WITH HORIZONTAL FACE BARS SPACED @1-1/4" BORDER TYPE 1 FOR SURFACE MOUNT MAX NC LEVEL SHALL BE 25, THE MAXIMUM PRESSURE DROP SHALL BE 0.05"WG, TITUS MODEL 112RSS REGISTER FACE SHALL BE FACTORY FINISHED WHITE.
SG-1	LINEAR ALUMINUM GRILLE WITH ANODIZED FINISH BARS SPACED @1/2" 1/8" BARS, BORDER TYPE 5 HEAVY DUTY MAX NC LEVEL SHALL BE 25, THE MAXIMUM PRESSURE DROP SHALL BE 0.05"WG, TITUS MODEL CT-580

CABINET UNIT HEATER SCHEDULE

SYMBOL	CFM	GPM	EWT	LWT	dP FT	CAPACITY (BTU/HR)	ENT AIR	LVG AIR	ELECTRIC DATA HP	VAC	Hz.	PH	MOTOR SPEED	WEIGHT	MANUF & MODEL
CUH-1	540	7	180	167	1.7	45,700	60°	137°	3/4	120	60	1	LOW	170 LBS	MODINE MODEL CW ARR 90 SIZE 8
CUH-2	150	1.3	180	165	0.3	7,400	70°	115°	1/30	120	60	1	LOW	100 LBS	MODINE MODEL CR ARR 58 SIZE 2

CUH-1 SHALL BE PROVIDED WITH DUCT COLLARS AND A HIGH EXTERNAL STATIC MOTOR.

EXHAUST FAN SCHEDULE

FAN NO.	MANUFACTURE & MODEL	CFM	RPM	S.P. INCHES H_2O	ELECTRIC DATA HP	VAC	Hz.	PH	DRIVE	TYPE	DAMPER	WEIGHT	AREA SERVED	REMARKS
EF/RF-1	GREENHECK BSQ-130	5000	1250	0.625	2	480	60	3	BELT	INLINE	MOTORIZED	125	AHU-1	VIBRATION ISOLATORS
EF-2	GREENHECK BSQ-130	1440	1250	0.5	1/2	120	60	1	BELT	INLINE	MOTORIZED	125	TOILET ROOMS	VIBRATION ISOLATORS
EF-3	GREENHECK SP-224	160	1000	0.375	83W	120	60	1	DIRECT	CABINET	BD	25	TOILET ROOMS	VIBRATION ISOLATORS
EF-4	GREENHECK SP-200	240	990	0.125		120	60	1	DIRECT	CABINET	BD		ELECTRICAL RM	VIBRATION ISOLATORS
EF-5	GREENHECK SP-228	395	1350	0.125	135W	120	60	1	DIRECT	CABINET	BD	25	CRAWL SPACE	VIBRATION ISOLATORS

UNIT HEATER SCHEDULE

SYMBOL	CFM	GPM	EWT	LWT	dP FT	CAPACITY (BTU/HR)	ENT AIR	LVG AIR	ELECTRIC DATA HP	VAC	Hz.	PH	MOTOR SPEED	WEIGHT	MANUF & MODEL
UH-1	340	1.0	180	160	1.4	9,600	70°	96°	1/25	110	60	1	HIGH	18 LBS	MODINE MODEL HS-18
UH-2	630	1.8	180	160	1.4	18,300	70°	96°	1/25	110	60	1	HIGH	36 LBS	MODINE MODEL HS-33

RADIATION SCHEDULE

SYMBOL	BTU/FT	ENT. WATER TEMP F	LVG WATER TEMP F	TUBE SIZE IN.	FIN SIZE IN.	FINS PER FT.	MANUF & MODEL
FTR-A	1040	180	160	3/4"	4-1/4" X3-5/8"	40	STERLING MODEL S 3/4"COPPER/AL CATALOG DESIGNATION C3/4-434

SOUND ATTENUATOR SCHEDULE

NO.	SIZE	CFM	ΔP "WG	NOISE REDUCTION PER OCTIVE BAND, DB 1	2	3	4	5	6	7	8
SAT-1	36X24X3', IAC SERIES HL	6530	0.1	3	4	4	7	9	19	18	7
SAT-2	36X24X3', IAC SERIES HL	5000	0.1	4	4	4	8	11	19	18	7

PUMP SCHEDULE

PUMP NO.	MANUFACTURER & MODEL NO.	GPM	HEAD IN.FT.	RPM	ELECTRIC DATA H.P.	VAC	HZ	PH	TYPE	AREA SERVED	REMARKS
P-1	B&G SERIES 80 - 2X2X7	65	40	1750	2	480	60	3	IN-LINE	HEATING SYSTEM	TRIPLE DUTY VALVE
P-2	B&G SERIES 80 - 2X2X7	65	40	1750	2	480	60	3	IN-LINE	HEATING SYSTEM	TRIPLE DUTY VALVE
P-3	GRUNDFOS UP15-42 B5	6	10	1750	1/25	110	60	1	IN-LINE	DOMESTIC HOT WATER	TRIPLE DUTY VALVE
P-4	GRUNDFOS UP26-99F	15	22	3000	1/6	110	60	1	IN-LINE	SNOW MELT SYSTEM	TRIPLE DUTY VALVE

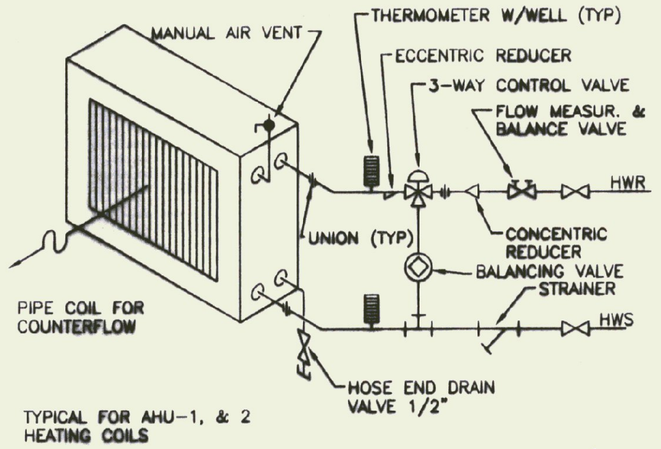

TYPICAL WATER COIL PIPING
NTS

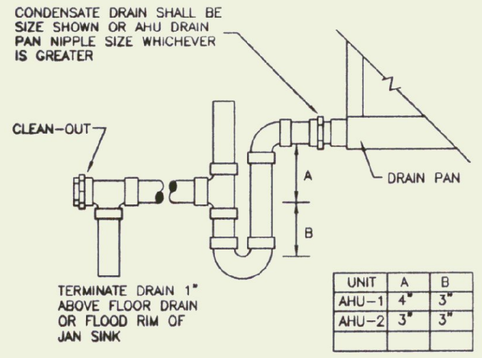

UNIT	A	B
AHU-1	4"	3"
AHU-2	3"	3"

A/C CONDENSATE DRAIN DETAIL
NTS

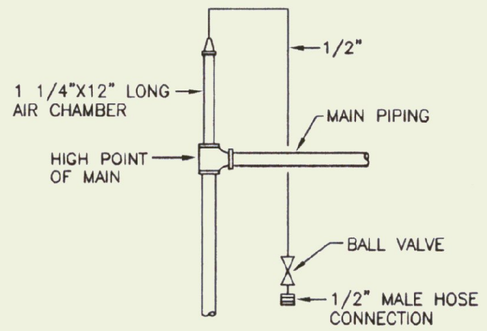

TYPICAL MANUAL AIR VENT
NTS

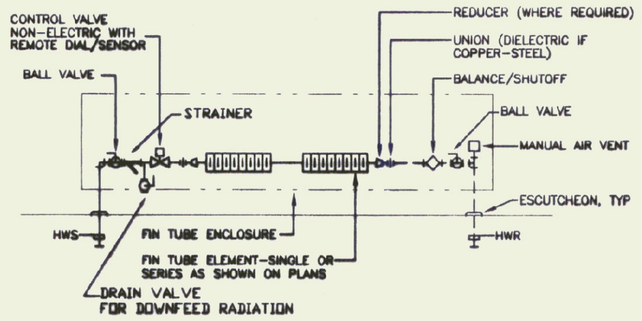

FIN TUBE RADIATION PIPING DETAIL
NOT TO SCALE

RECORD DRAWING

NO.	DATE	REVISIONS	DRWN	CHKD

TIMOTHY D. SMITH & ASSOCIATES, PC ARCHITECTS
OLD RAILROAD STATION
802-442-8184
NORTH BENNINGTON, VERMONT 05257
FAX 802-442-5241

WRIGHT ENGINEERING, LTD.
CIVIL ENGINEERS
126 MERCHANTS ROW - P.O. BOX 176
RUTLAND, VERMONT 05702-0176
802-775-2511 FAX 775-8915

ROBT W. HALL
CONSULTING ENGINEERS, INC.
540 MEADOW STREET EXTENSION, STE. 2
AGAWAM, MASSACHUSETTS 01001-0002
413-789-0860 FAX 789-3295

T.J. BOYLE AND ASSOCIATES
LANDSCAPE ARCHITECTS
301 COLLEGE STREET
BURLINGTON, VERMONT 05401
802-658-3555 FAX 863-1582

STATE OF VERMONT ROBERT F. GUFFREE No. 5614 REGISTERED ARCHITECT
1-16-98

PROJECT NO.IM 091-1 (30)
SOUTHEAST VERMONT WELCOME CENTER
GUILFORD, VERMONT

SHEET TITLE: HVAC SCHEDULES AND DETAILS

DSGN BY: RFG
DRWN BY: RFG
CHKD BY: RFG
CHKD BY: RWH

STATE OF VERMONT
AGENCY OF ADMINISTRATION
DEPARTMENT OF
BUILDINGS & GENERAL SERVICES

DATE: 1-16-98 SHEET NO.____ OF____ SHEETS

M-5