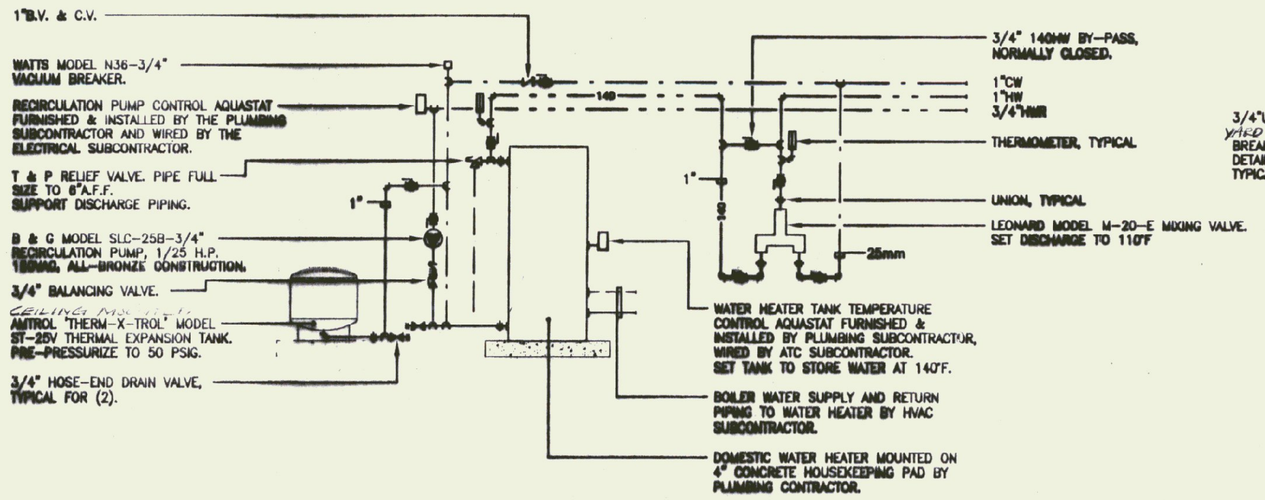

WATER HEATING SYSTEM PIPING DETAIL
NOT TO SCALE

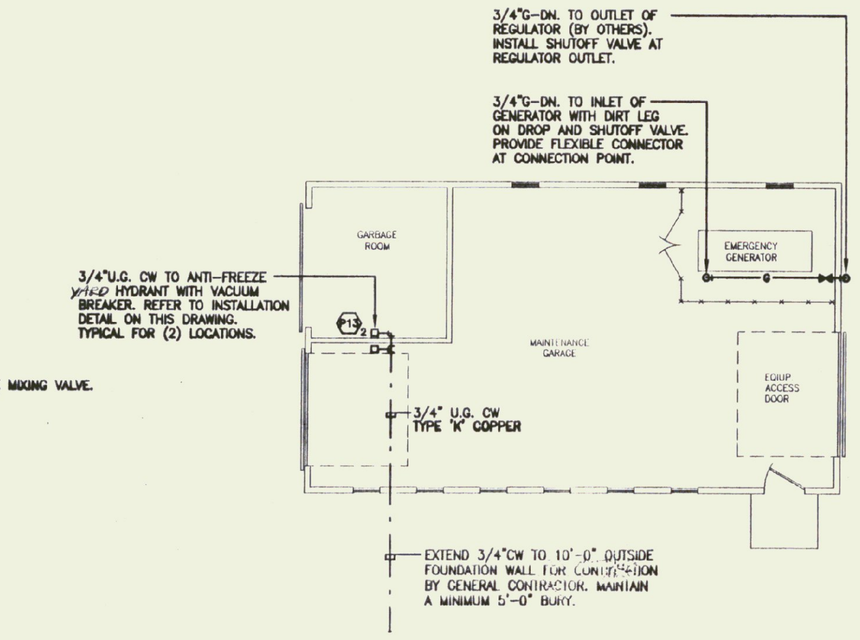

MAINTENANCE SHED PLUMBING PLAN
SCALE: 1/8" = 1'-0"

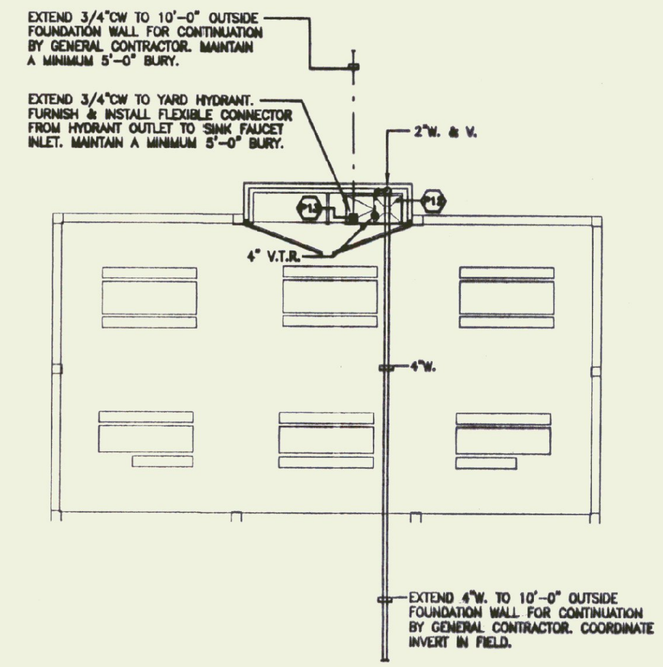

PICNIC SHED PLUMBING PLAN
SCALE: 1/8" = 1'-0"

PLUMBING SYMBOL LIST

	S. OR W.	SOIL OR WASTE PIPING, ABOVE SLAB
	S. OR W.	SOIL OR WASTE PIPING, BELOW SLAB
	V.	VENT PIPING, ABOVE SLAB
	V.	VENT PIPING, ABOVE SLAB
G	G	PROPANE GAS PIPING
TW	TW	TEMPERED WATER, 100°F (ADJ.)
CH	CH	CHILLED WATER, 50°F
CW	CW	COLD WATER PIPING
HW	HW	HOT WATER PIPING
HWR	HWR	HOT WATER RECIRCULATION PIPING
	UP	RISE IN PIPING
	DN.	DROP IN PIPING
W. & V.	W. & V.	WASTE PIPING P-TRAP AND VENT
	CAP	CAPPED PIPING
	C.O.	SOIL OR WASTE PIPE CLEANOUT
		PIPING UNION
	B.V.	BALL VALVE
	G.V.	GATE VALVE
	B.C.V.	COMBINATION BALANCE/SHUTOFF VALVE
	C.V.	CHECK VALVE
	P.R.V.	PRESSURE REDUCING VALVE
	STR.	STRAINER
	F.L.C.O.	FLOOR LEVEL CLEANOUT
	F.D.	FLOOR DRAIN
	A.P.	ACCESS PANEL
	S.A.	SHOCK ARRESTOR
	V.T.R.	VENT THRU ROOF
	T.P.	TRAP PRIMER
	V.I.F.	VERIFY EXACT SIZE AND LOCATION IN FIELD
	U.G.	UNDERGROUND PIPING
P-1		PLUMBING FIXTURE TYPE & QUANTITY
1		INDICATES A SPECIFIC NOTE

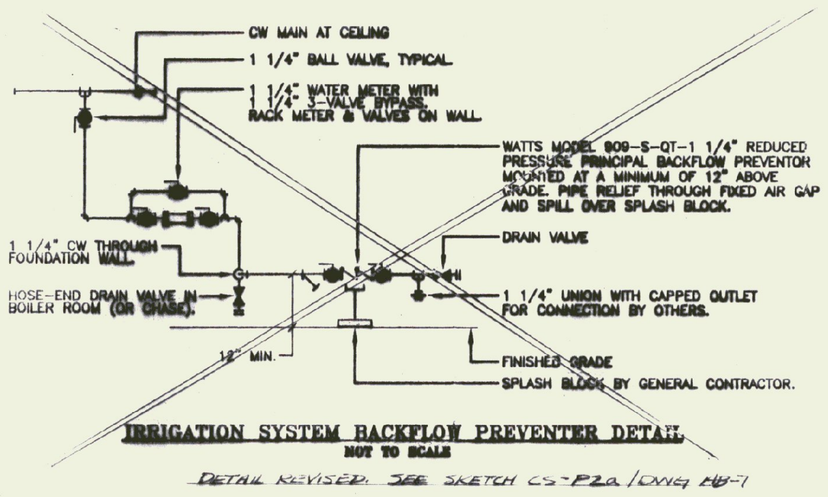

IRRIGATION SYSTEM BACKFLOW PREVENTER DETAIL
NOT TO SCALE

DETAIL REVISED. SEE SKETCH CS-P2a / DWG H6-1

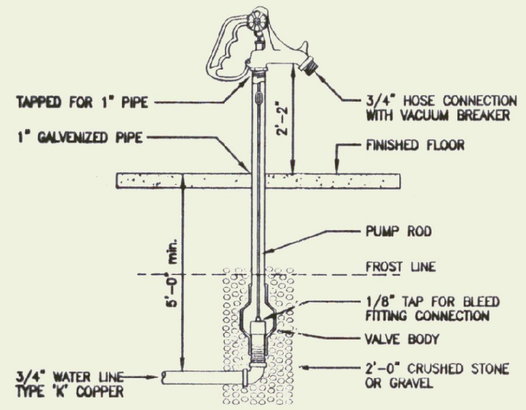

YARD HYDRANT DETAIL
NOT TO SCALE

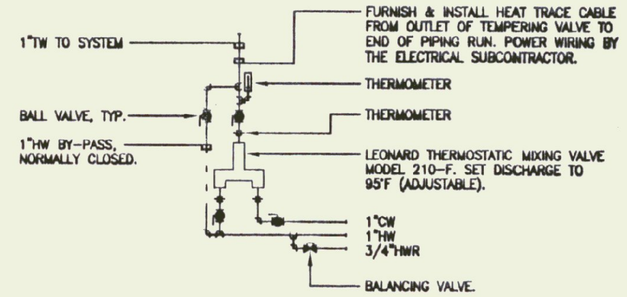

TEMPERING VALVE PIPING DETAIL
NOT TO SCALE

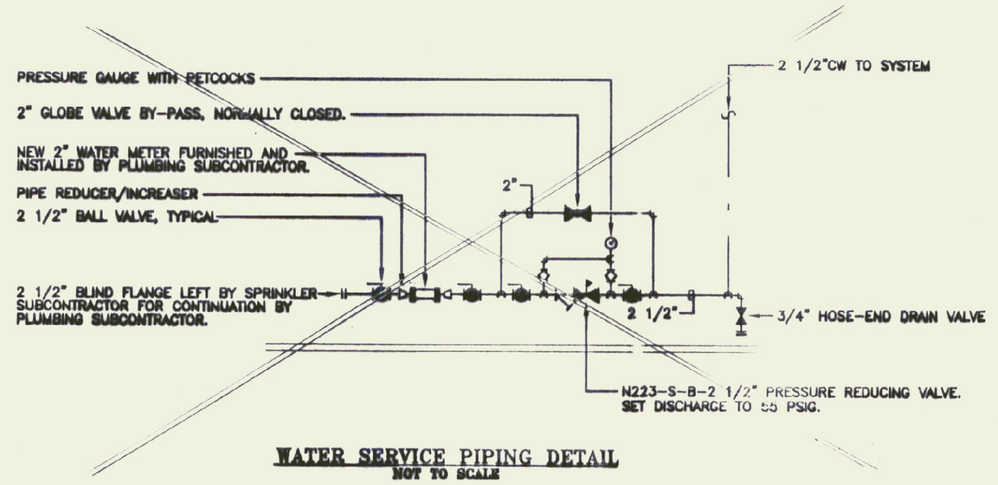

WATER SERVICE PIPING DETAIL
NOT TO SCALE

DETAIL REVISED. SEE SKETCH CS-P2a / DWG H6-1

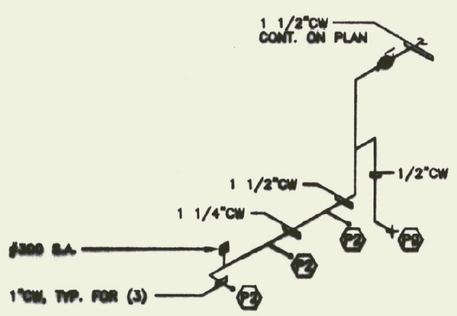

DETAIL No.1: COLD WATER PIPING
NOT TO SCALE

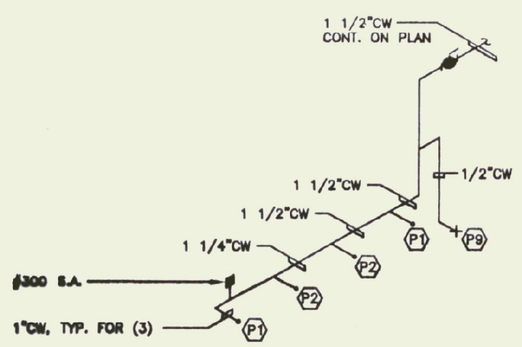

DETAIL No.1: COLD WATER PIPING
NOT TO SCALE

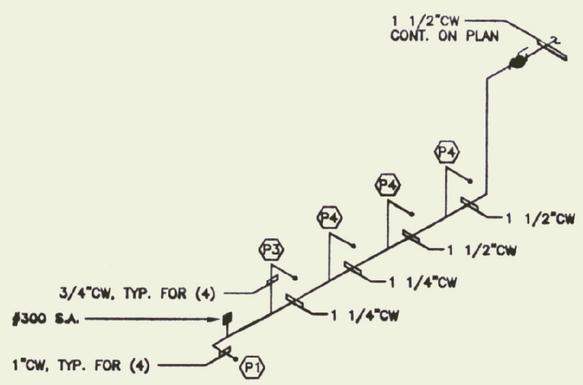

DETAIL No.3: COLD WATER PIPING
NOT TO SCALE

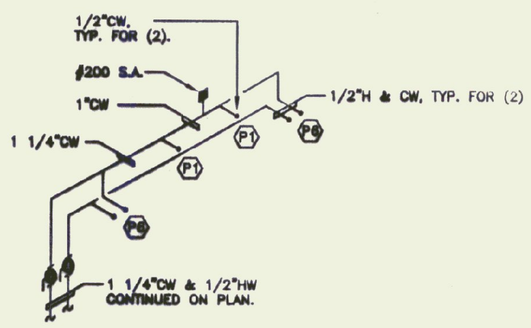

DETAIL No.4: HOT & COLD WATER PIPING
NOT TO SCALE

RECORD DRAWING

NO.	DATE	REVISIONS	DRWN	CHKD

TIMOTHY D. SMITH & ASSOCIATES, PC ARCHITECTS
OLD RAILROAD STATION — NORTH BENNINGTON, VERMONT 05257
802-442-8184 — FAX 802-442-5241

WRIGHT ENGINEERING, LTD. — CIVIL ENGINEERS
120 MERCHANTS ROW - P.O. BOX 176 — RUTLAND, VERMONT 05702-0176 — 802-775-2511 — FAX 775-8615

ROBT W. HALL — CONSULTING ENGINEERS, INC.
540 MEADOW STREET EXTENSION, STE. 2 — AGAWAM, MASSACHUSETTS 01001-0002 — 413-789-6660 — FAX 789-3296

T.J. BOYLE AND ASSOCIATES — LANDSCAPE ARCHITECTS
361 COLLEGE STREET — BURLINGTON, VERMONT 05401 — 802-864-3555 — FAX 863-1562

STATE OF VERMONT — ROBERT W. HALL — No. 8200 — REGISTERED PROFESSIONAL ENGINEER — 1/23/98

PROJECT NO.IM 091-1 (30)
SOUTHEAST VERMONT WELCOME CENTER
GUILFORD, VERMONT

SHEET TITLE: PARTIAL PLUMBING PLANS & DETAILS

DSGN BY: MPL
DRWN BY: MPL
CHKD BY: RWH
CHKD BY:

STATE OF VERMONT
AGENCY OF ADMINISTRATION
DEPARTMENT OF
BUILDINGS & GENERAL SERVICES

DATE: 1-16-98 — SHEET NO.____ OF____ SHEETS

P-2