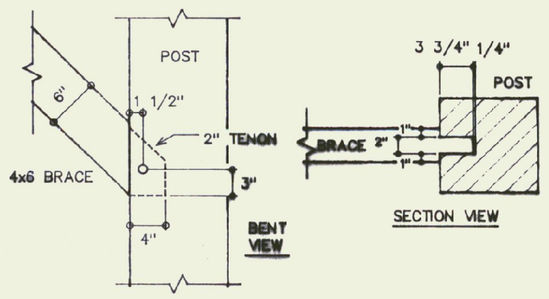

CENTER BRACE DETAIL
DETAIL #1

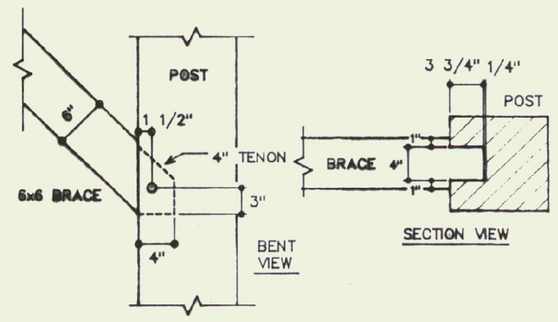

CENTER BRACE DETAIL
DETAIL #2

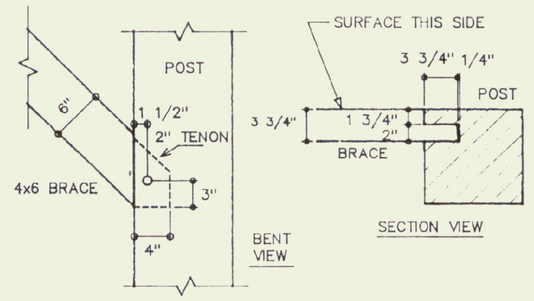

OUTSIDE BRACE DETAIL
DETAIL #3

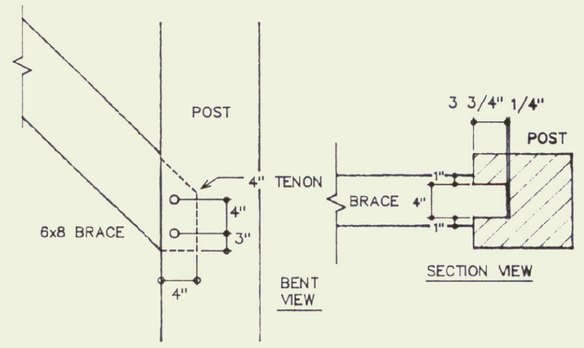

6x8 BRACE DETAIL
DETAIL #4

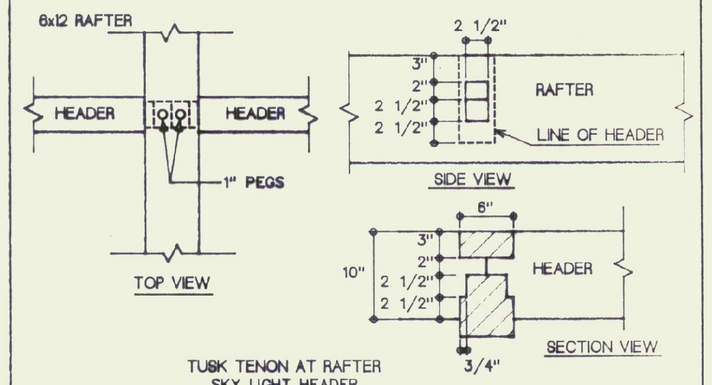

TUSK TENON AT RAFTER
SKY LIGHT HEADER
DETAIL #5

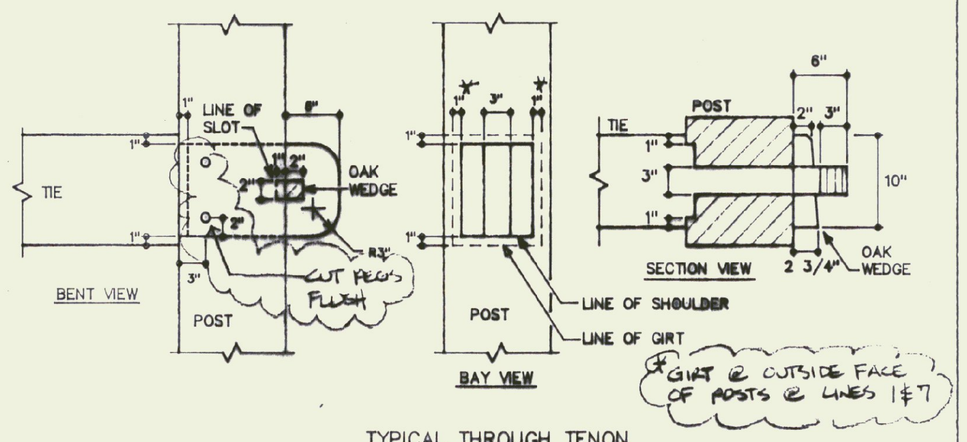

TYPICAL THROUGH TENON
DETAIL #6

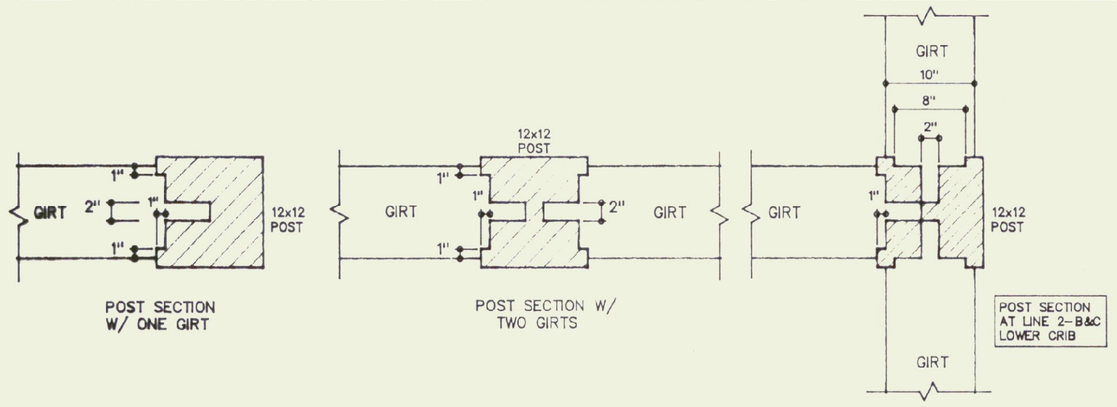

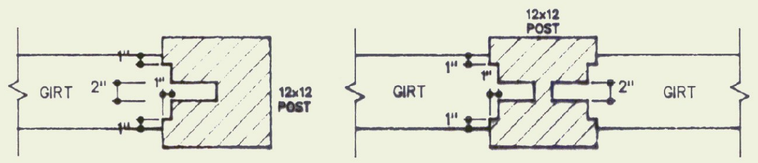

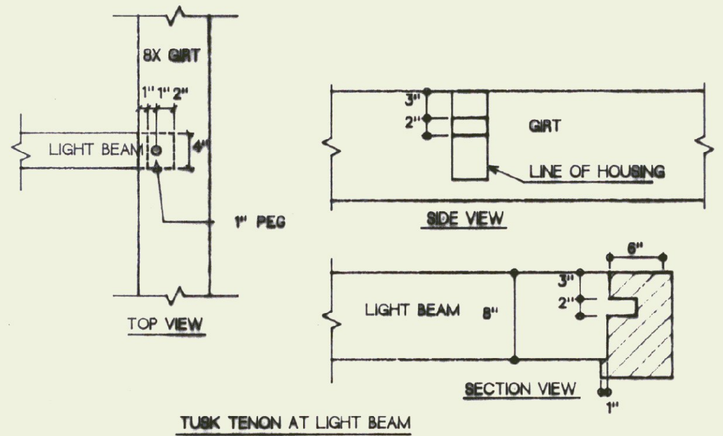

TUSK TENON AT LIGHT BEAM
DETAIL #7

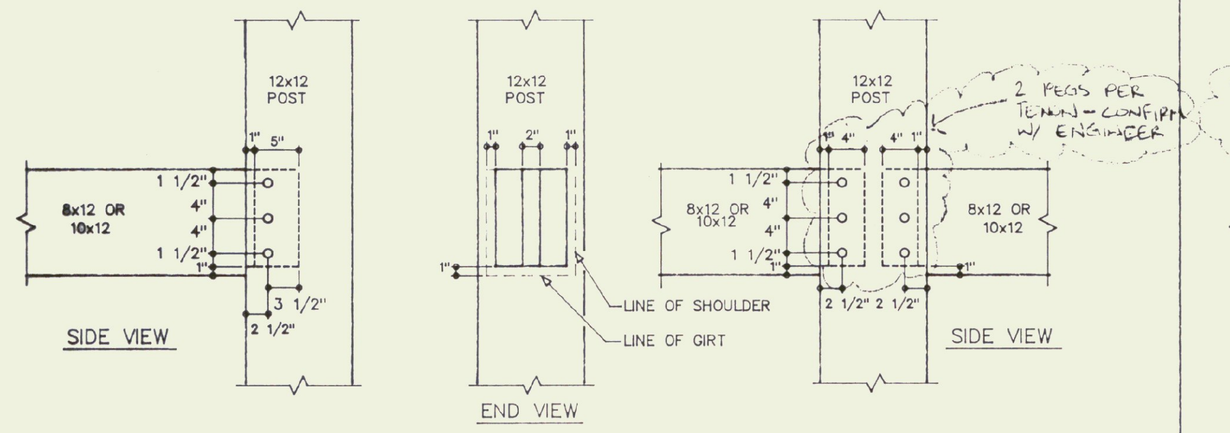

10x12 & 8x12 SHOULDERED TENON
DETAIL #8

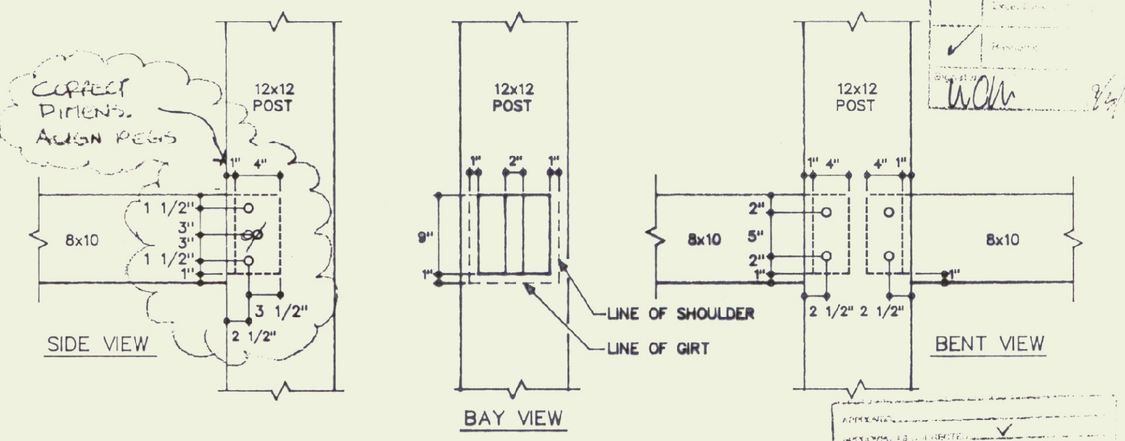

8x10 SHOULDERED TENON
DETAIL #9

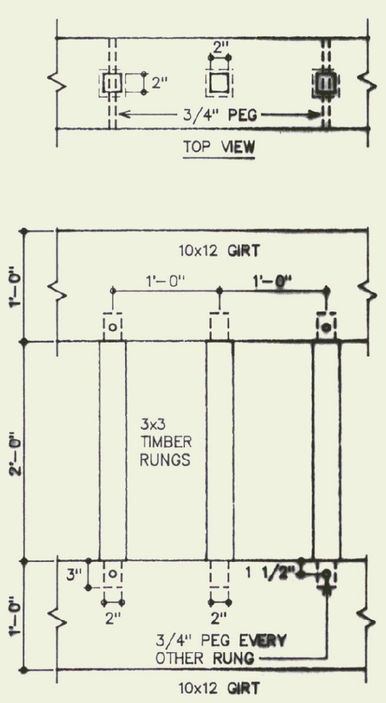

TIMBER RUNGS
DETAIL #10

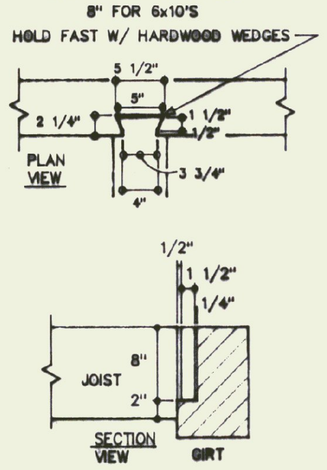

6x10 DOVETAIL
DETAIL #11

RECORD DRAWING

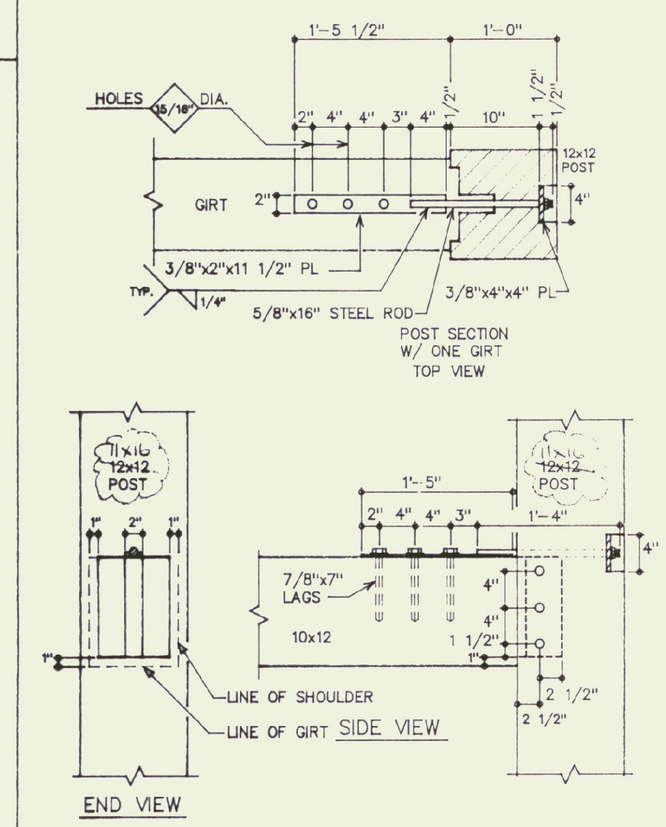

10x12 SHOULDERED TENON W/ STEEL ROD
DETAIL #12

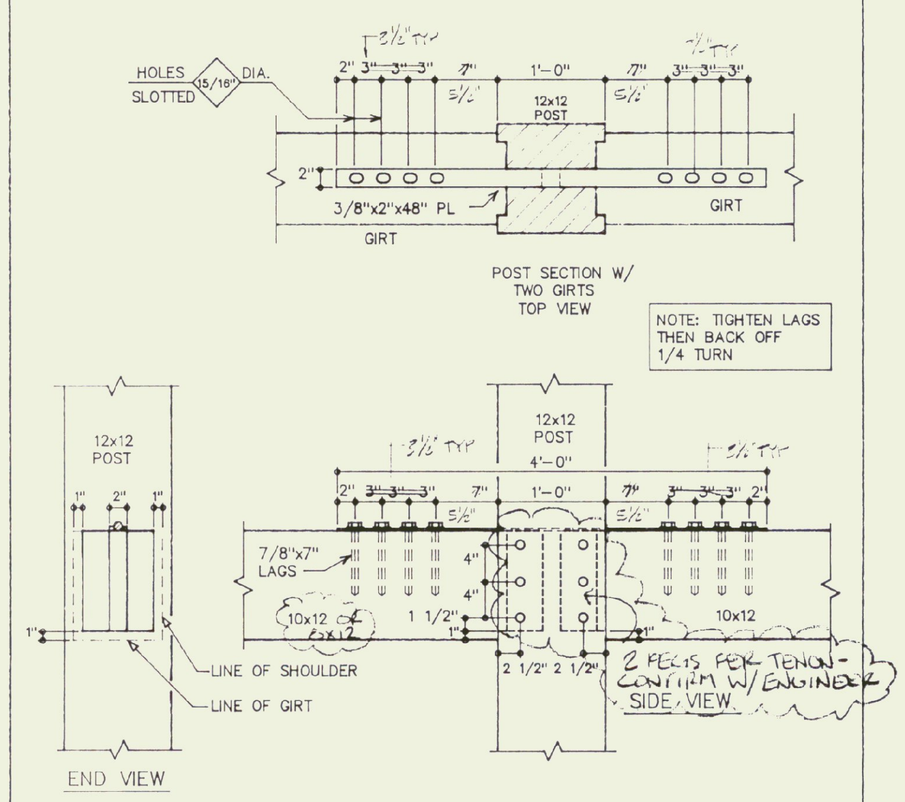

10x12 SHOULDERED TENON W/ STEEL ROD
DETAIL #13

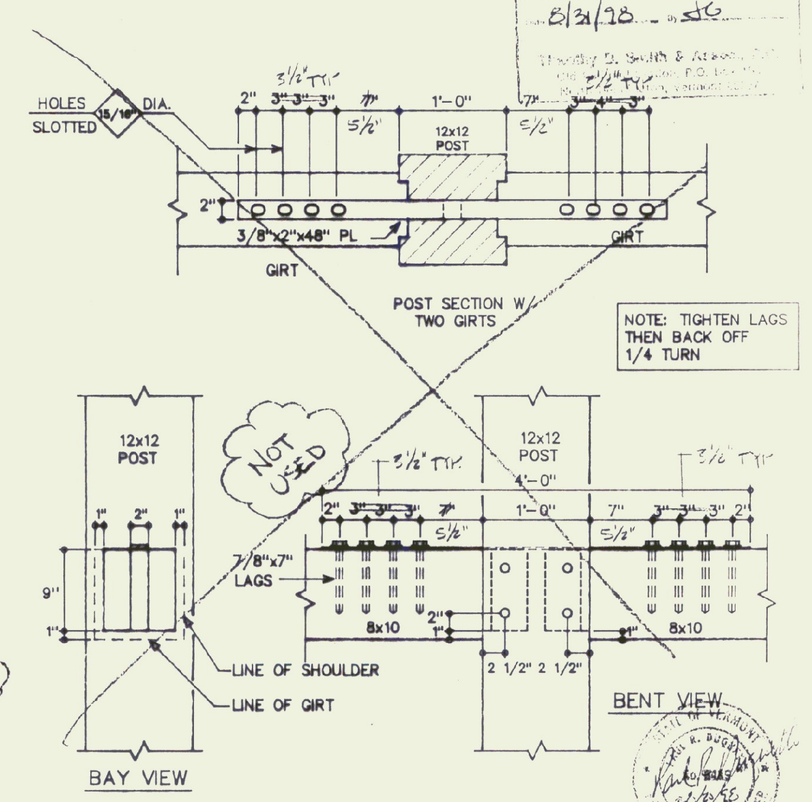

8x10 SHOULDERED TENON W/ STEEL STRAP
DETAIL #14

REVISIONS	BY

VERMONT TIMBER WORKS
SOUTH LONDONDERRY, VT
802-824-5502

SHOP DRAWINGS
JOINT DETAILS

ARCH: TIMOTHY D. SMITH & ASSOCIATES
ENG: DUFRESNE & HENRY
G.C.: NEAGLEY & CHASE

PROJECT:
SOUTHEAST VERMONT WELCOME CENTER
GUILFORD, VERMONT

DRAWN : D.F.	CHECKED :
DATE : 8/15/98	
SCALE : 1 1/2"=1'-0"	
JOB NO. :	
SHEET F-13	
OF SHEETS	