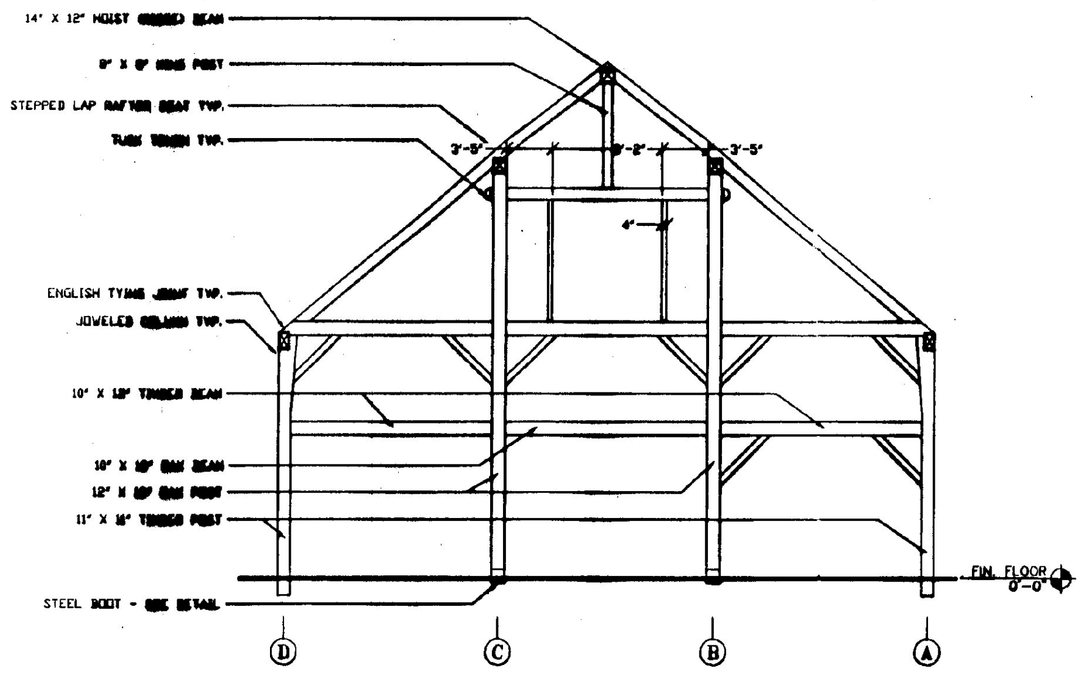

1 WELCOME CENTER BUILDING BENT 1
1/8" = 1'-0"

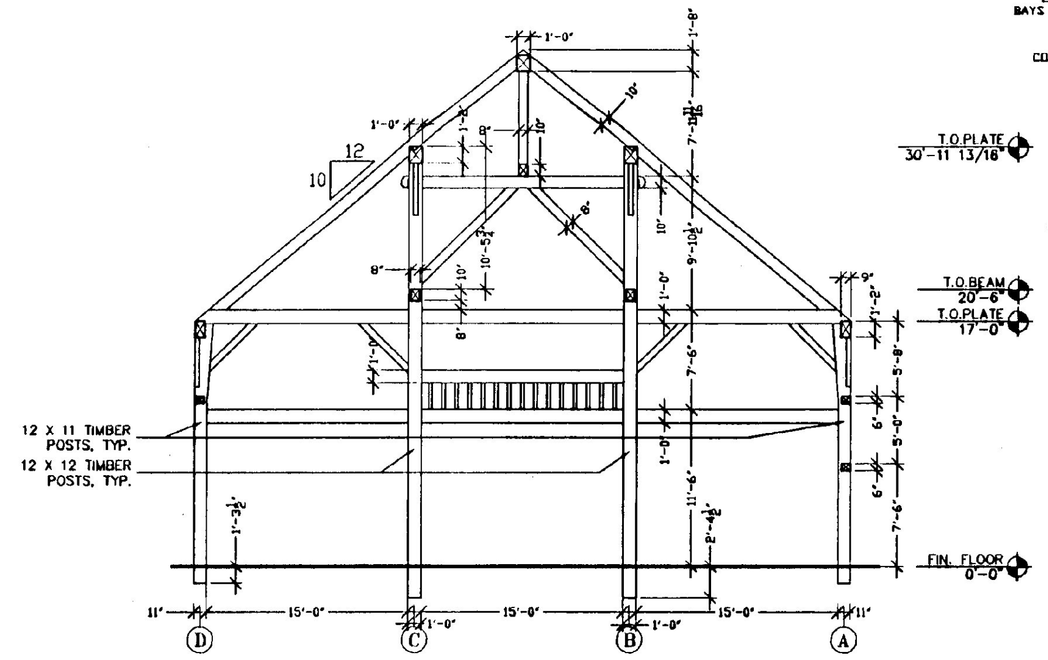

2 WELCOME CENTER BUILDING BENT 2
1/8" = 1'-0"

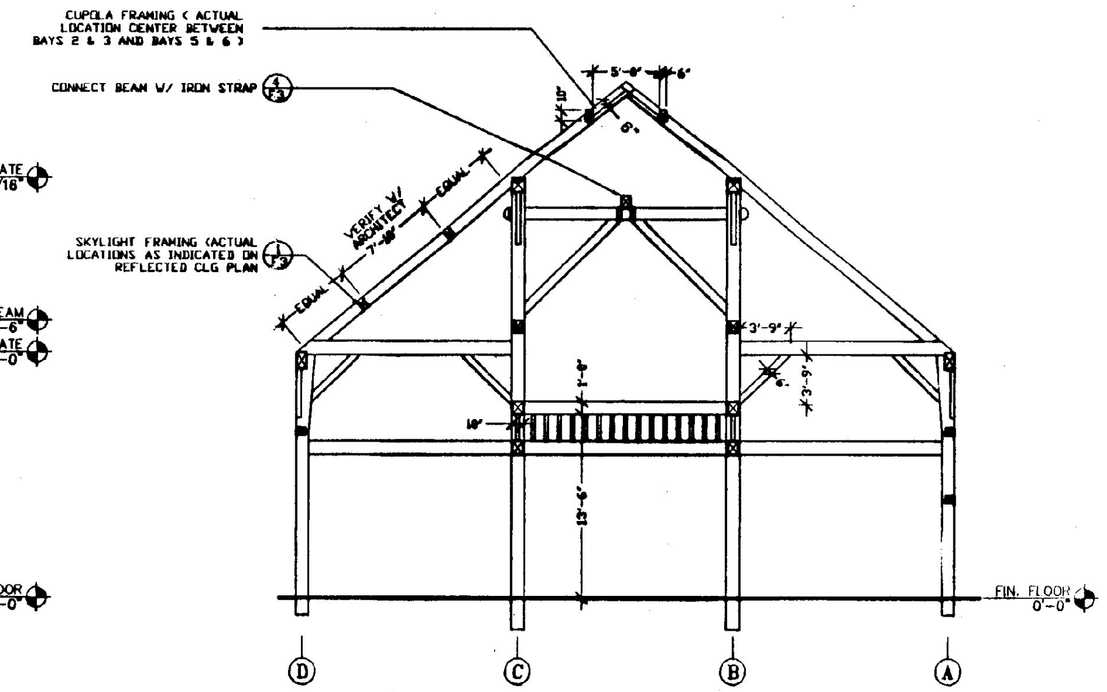

3 WELCOME CENTER BUILDING BENT 3
1/8" = 1'-0"

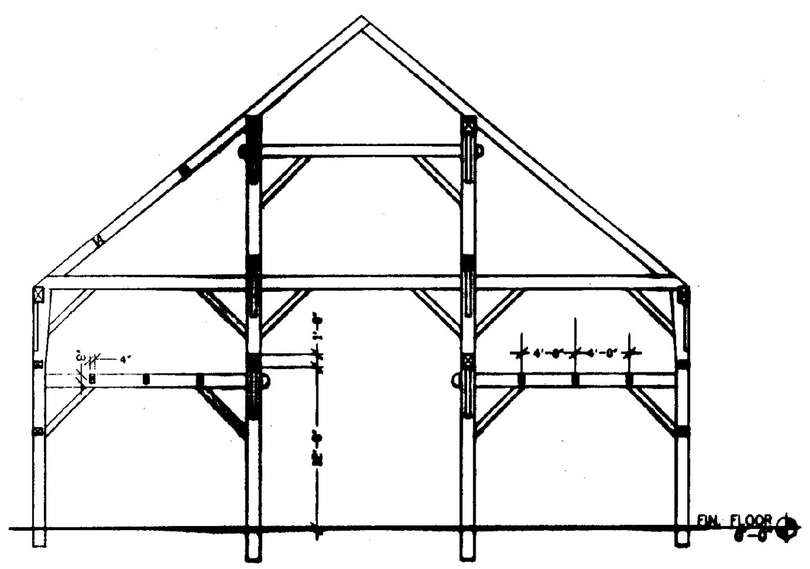

4 WELCOME CENTER BUILDING BENT 4
1/8" = 1'-0"

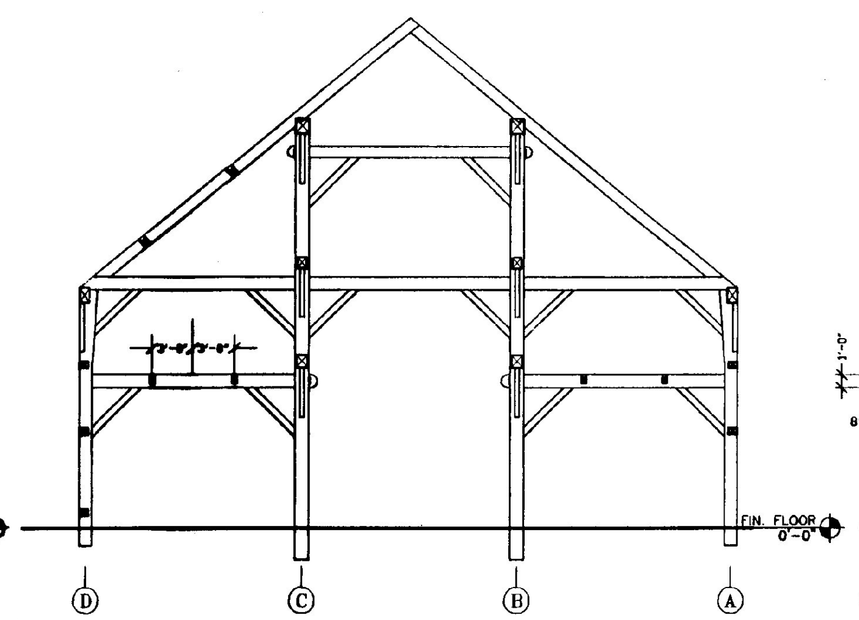

5 WELCOME CENTER BUILDING BENT 5
1/8" = 1'-0"

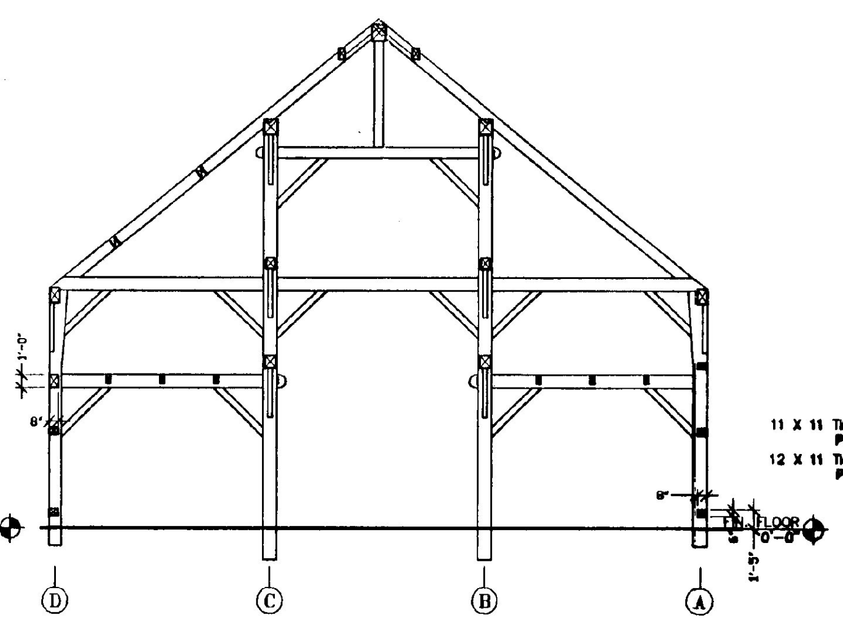

6 WELCOME CENTER BUILDING BENT 6
1/8" = 1'-0"

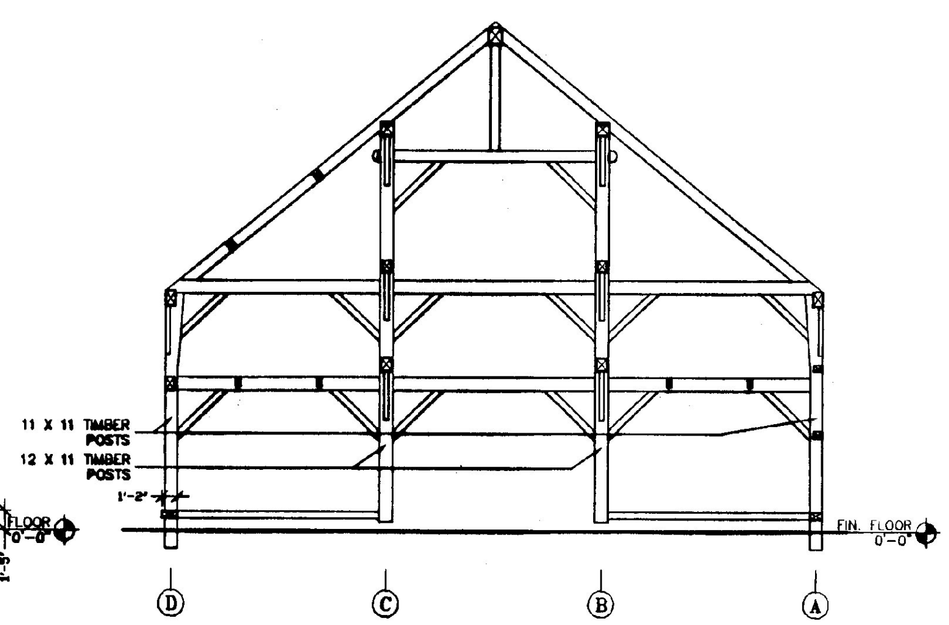

7 WELCOME CENTER BUILDING BENT 7
1/8" = 1'-0"

RECORD DRAWING

NO.	DATE	REVISIONS	DRWN	CHKD

TIMOTHY D. SMITH & ASSOCIATES, PC ARCHITECTS
OLD RAILROAD STATION
802-442-8184
NORTH BENNINGTON, VERMONT 05257
FAX 802-442-5241

WRIGHT ENGINEERING, LTD.
CIVIL ENGINEERS
[illegible]

ROBT W. HALL
CONSULTING ENGINEERS, INC.
[illegible]

T.J. BOYLE AND ASSOCIATES
LANDSCAPE ARCHITECTS
301 COLLEGE STREET
BURLINGTON, VERMONT 05401
802-658-3555 FAX 863-1642

REGISTERED ARCHITECT TIMOTHY D. SMITH NO. 711 STATE OF VERMONT

PROJECT NO.IM 091-1 (30)
SOUTHEAST VERMONT WELCOME CENTER
GUILFORD, VERMONT

SHEET TITLE: WELCOME CENTER BUILDING TIMBER FRAME

DSGN BY:
DRWN BY:
CHKD BY:
CHKD BY:

STATE OF VERMONT
AGENCY OF ADMINISTRATION
DEPARTMENT OF
BUILDINGS & GENERAL SERVICES

DATE: 1-16-98 SHEET NO._____OF_____SHEETS

F2