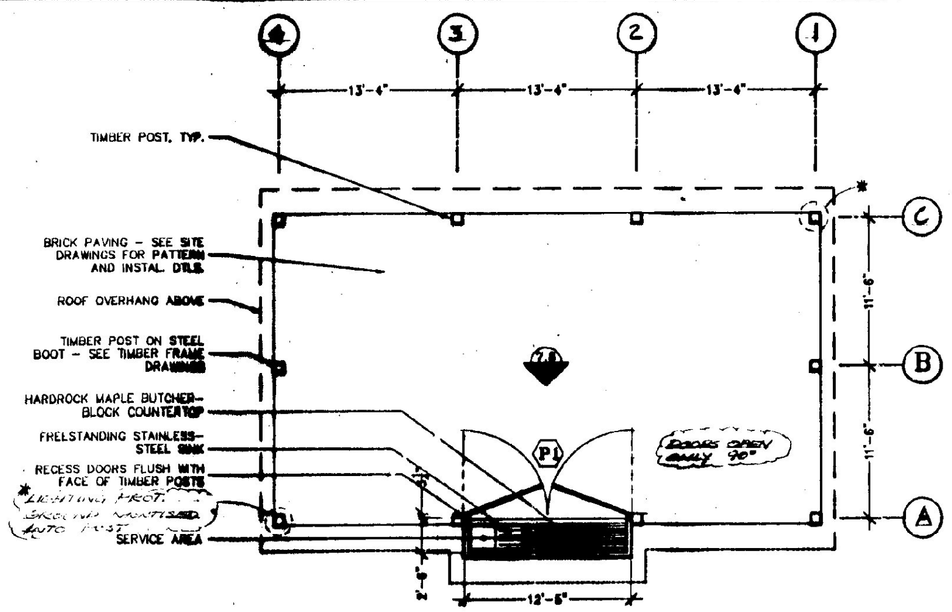

1 PICNIC SHED PLAN
1/8" = 1'-0"

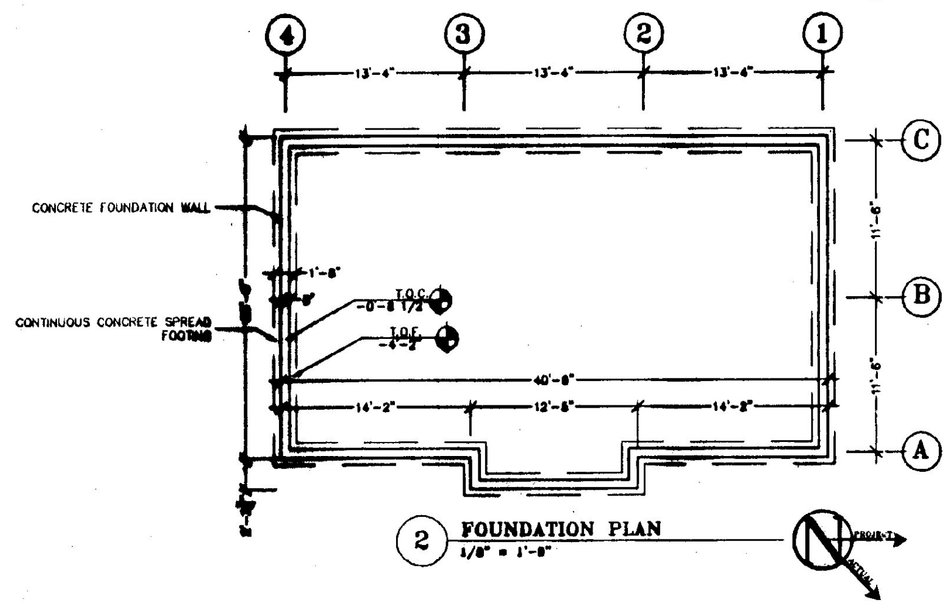

2 FOUNDATION PLAN
1/8" = 1'-0"

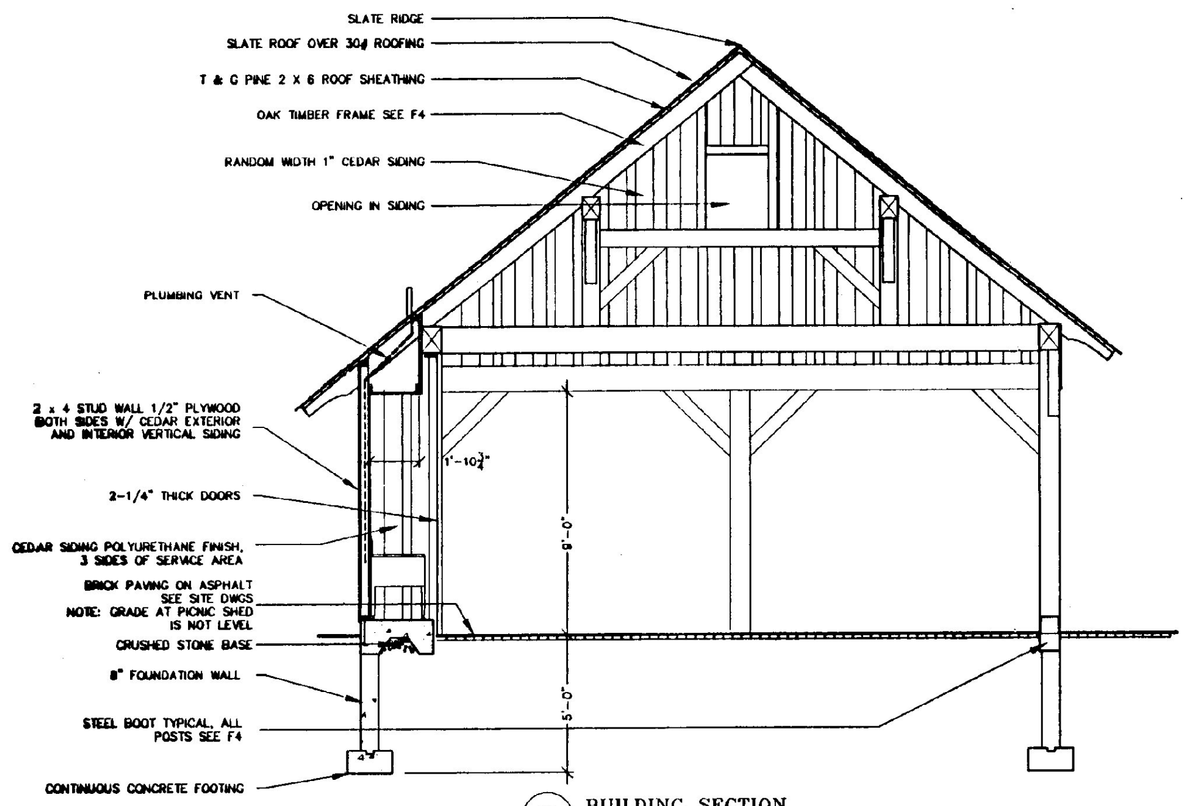

3 BUILDING SECTION
1/4" = 1'-0"

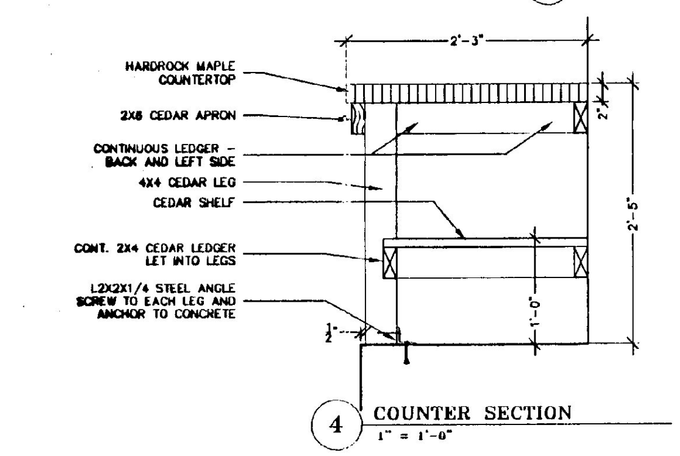

4 COUNTER SECTION
1" = 1'-0"

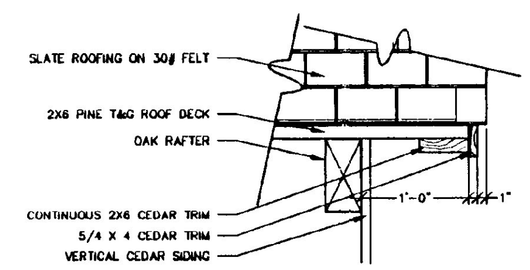

5 RAKE DETAIL
1" = 1'-0"

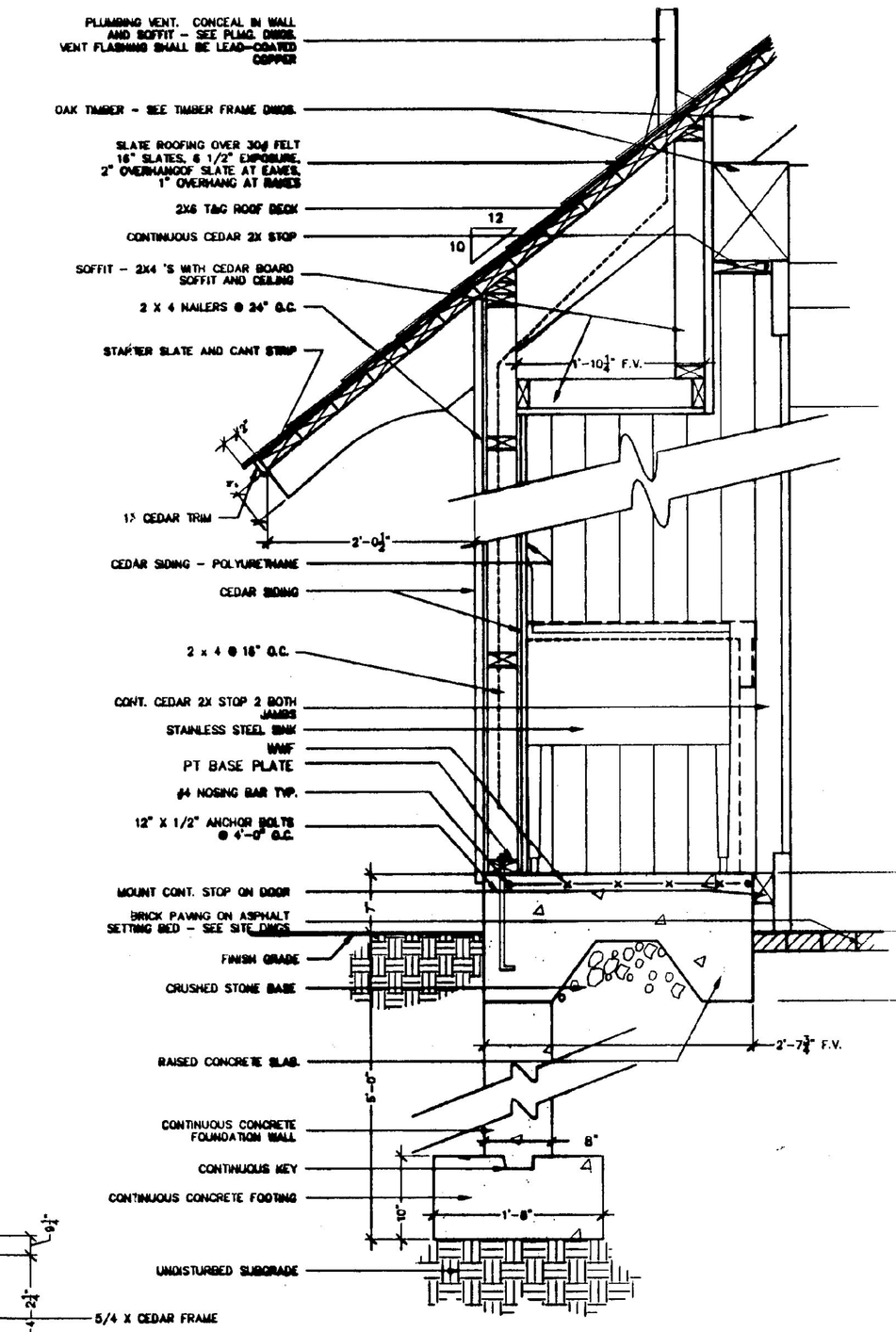

6 WALL SECTION
1" = 1'-0"

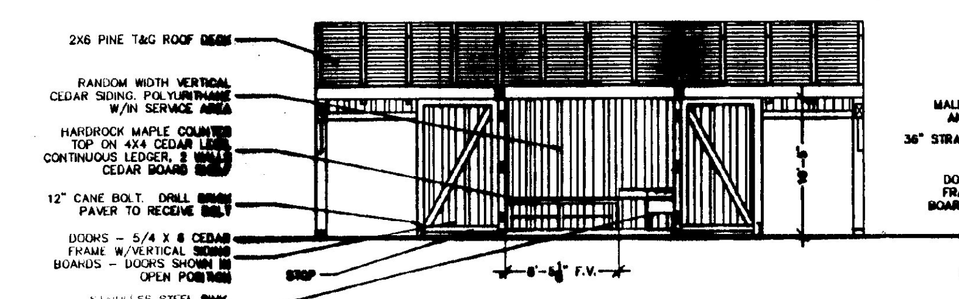

7 INTERIOR ELEVATION WITH DOORS OPEN
1/8" = 1'-0"

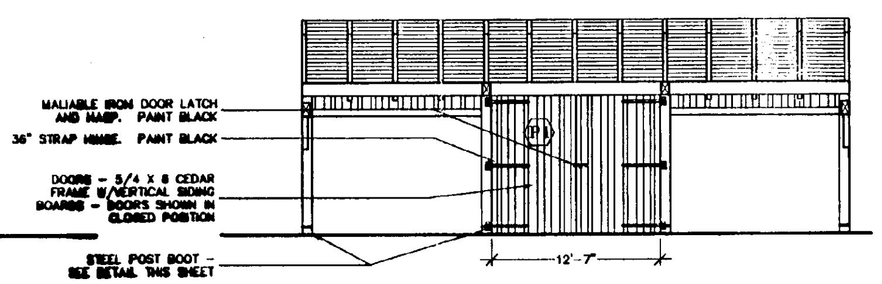

8 INTERIOR ELEVATION WITH DOORS CLOSED
1/8" = 1'-0"

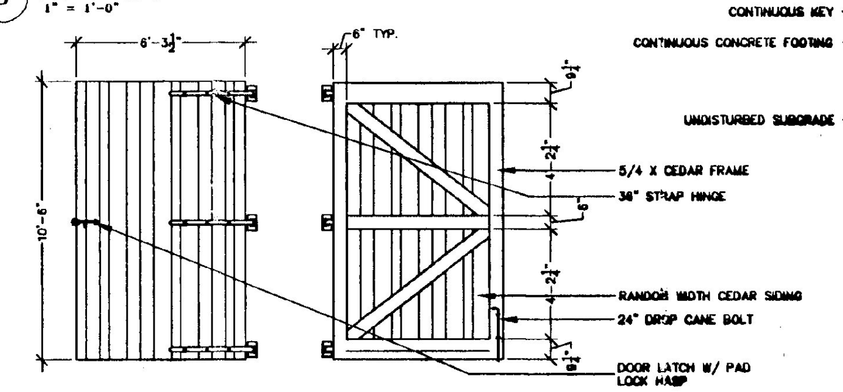

9 SERVICE AREA DOOR DETAIL
1/4" = 1'-0"

RECORD DRAWING

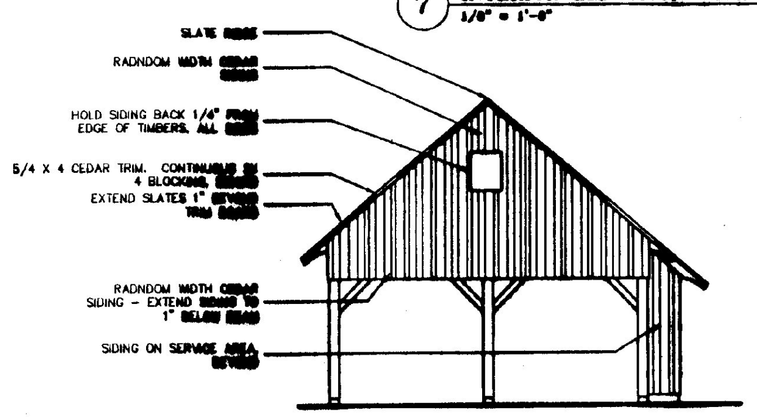

10 SOUTH ELEVATION
1/8" = 1'-0"

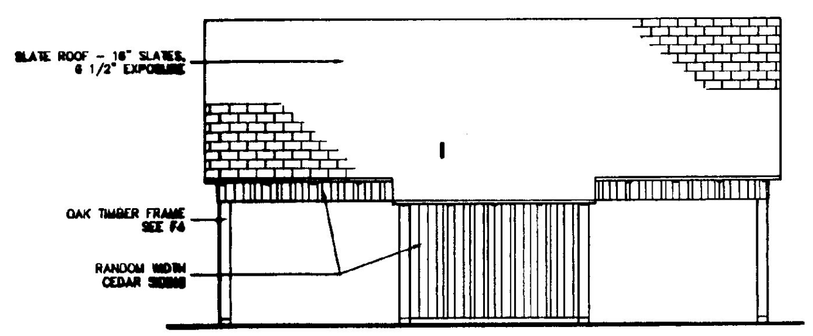

11 EAST ELEVATION
1/8" = 1'-0"

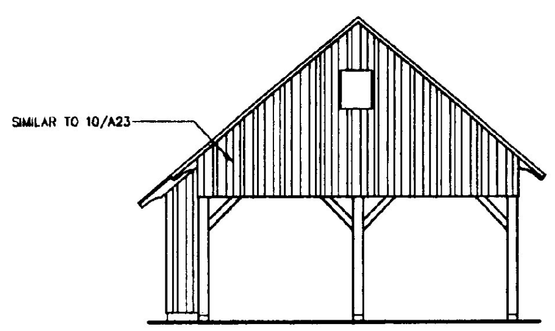

12 NORTH ELEVATION
1/8" = 1'-0"

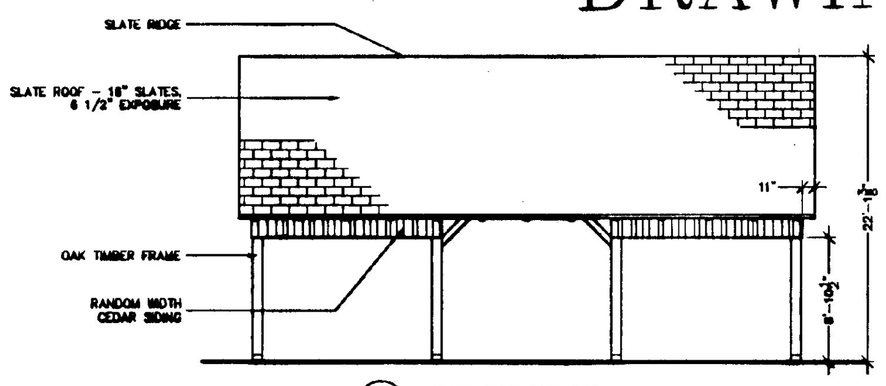

13 WEST ELEVATION
1/8" = 1'-0"

NO.	DATE	REVISIONS	DRWN	CHKD

TIMOTHY D. SMITH & ASSOCIATES, PC ARCHITECTS
OLD RAILROAD STATION
802-442-8184
NORTH BENNINGTON, VERMONT 05257
FAX 802-442-5241

WRIGHT ENGINEERING, LTD.
CIVIL ENGINEERS
180 MERCHANTS ROW – P.O. BOX 170
RUTLAND, VERMONT 05702-0170
802-775-5261 FAX 775-8015

ROBT W. HALL
CONSULTING ENGINEERS, INC.
540 MEADOW STREET EXTENSION, STE. 2
AGAWAM, MASSACHUSETTS 01001-3002
413-789-8880 FAX 789-3886

T.J. BOYLE AND ASSOCIATES
LANDSCAPE ARCHITECTS
301 COLLEGE STREET
BURLINGTON, VERMONT 05401
802-658-3555 FAX 863-1562

REGISTERED ARCHITECT TIMOTHY D. SMITH NO. 711 STATE OF VERMONT

PROJECT NO.IM 091-1 (30)
SOUTHEAST VERMONT WELCOME CENTER
GUILFORD, VERMONT

SHEET TITLE: PICNIC SHED

DSGN BY:
DRWN BY:
CHKD BY:
CHKD BY:

STATE OF VERMONT
AGENCY OF ADMINISTRATION
DEPARTMENT OF
BUILDINGS & GENERAL SERVICES

DATE: 1-16-98 SHEET NO._____OF_____SHEETS

A24