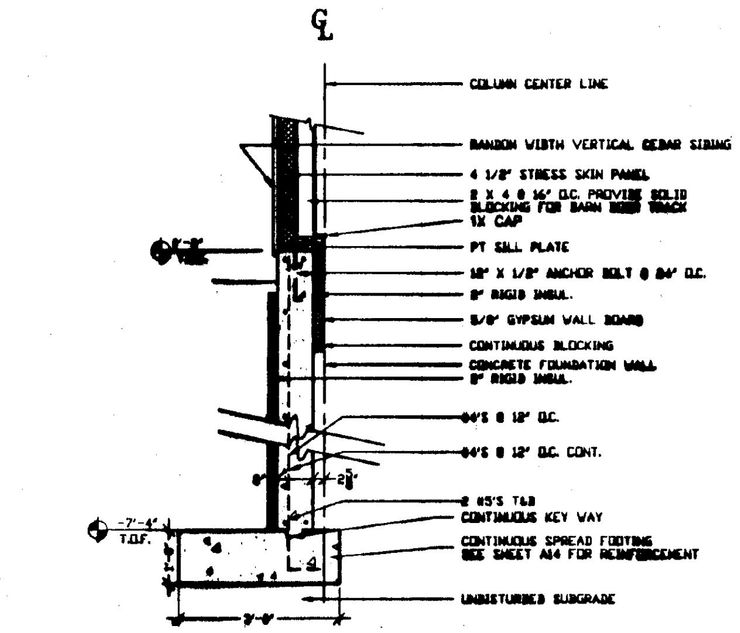

1 FOUNDATION DETAIL
1/2" = 1'-0"

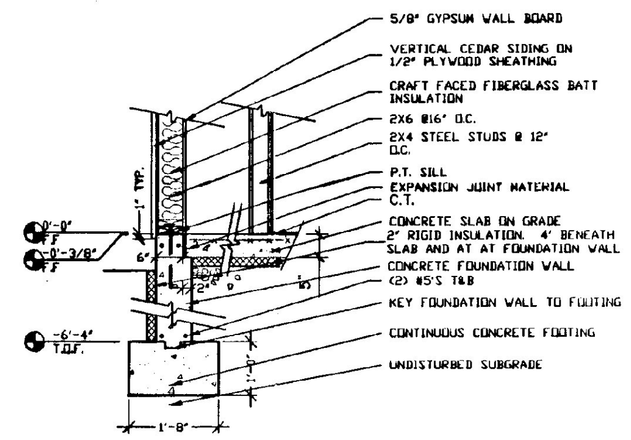

2 FOUNDATION DETAIL
1/2" = 1'-0"

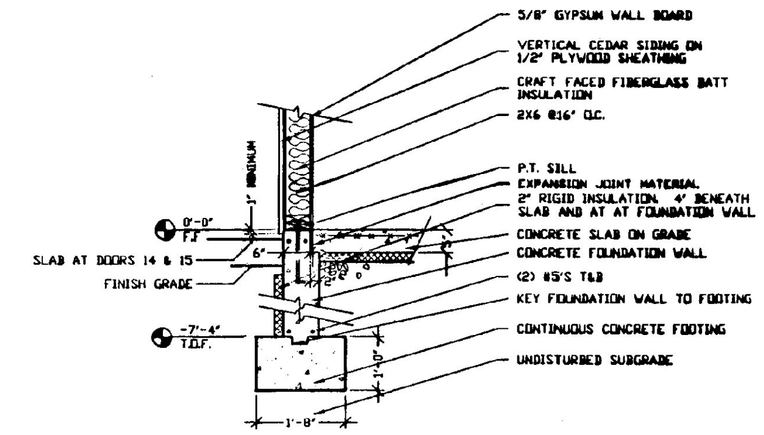

3 FOUNDATION DETAIL
1/2" = 1'-0"

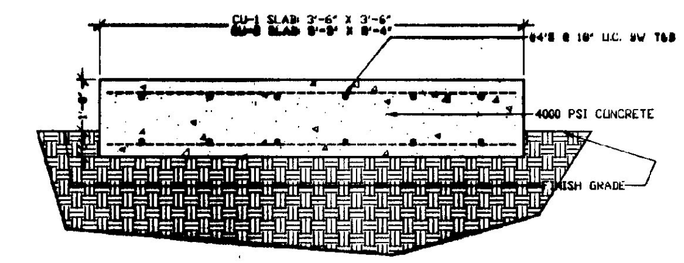

4 MECHANICAL EQUIPMENT SLAB
1/8" = 1'-0"

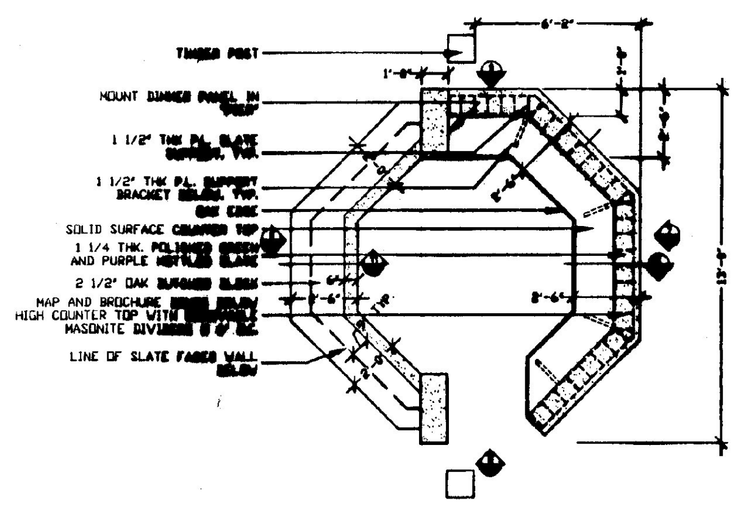

5 INFORMATION DESK PLAN
1/4" = 1'-0"
SEE SHOP DWGS

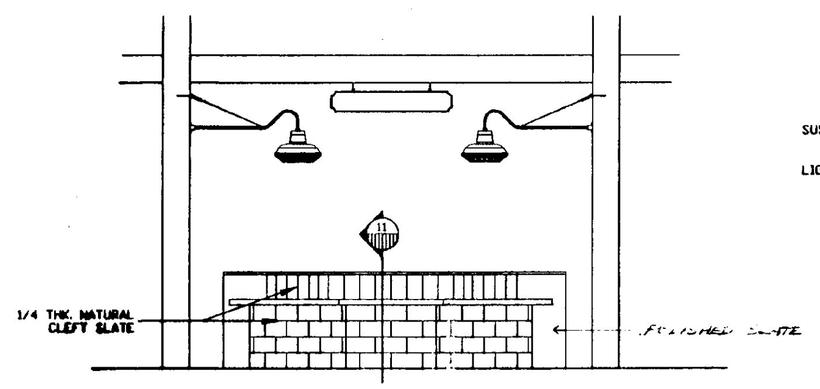

6 INFORMATION DESK ELEVATION FACING NORTH
1/4" = 1'-0"

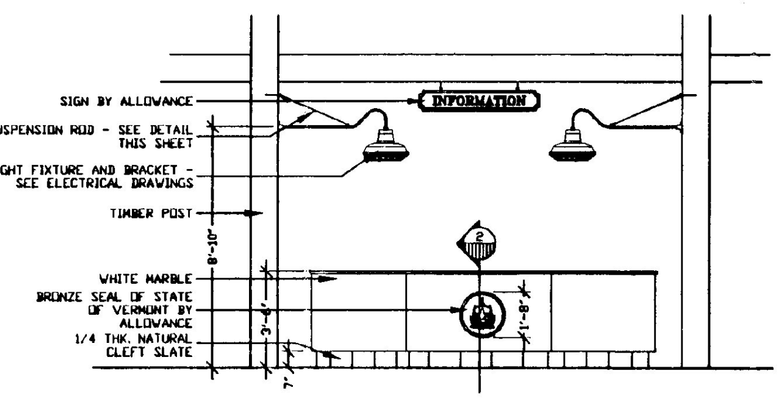

7 INFORMATION DESK ELEVATION FACING SOUTH
1/4" = 1'-0"

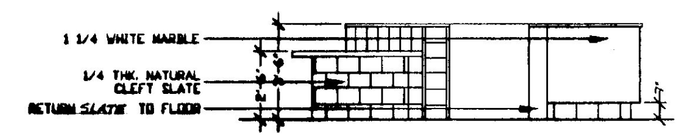

8 INFORMATION DESK ELEVATION FACING WEST
1/4" = 1'-0"

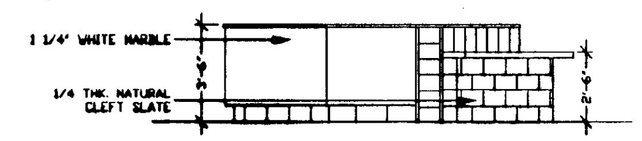

9 INFORMATION DESK ELEVATION FACING EAST
1/4" = 1'-0"

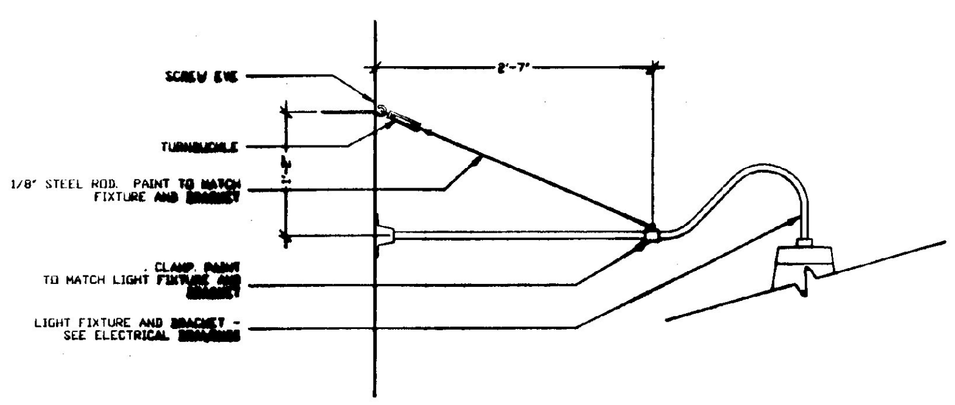

10 LIGHT FIXTURE BRACKET DETAIL
1" = 1'-0"
SEE SKETCH ES-22 & DWG AB-6 FOR ROUTING OF CABLE

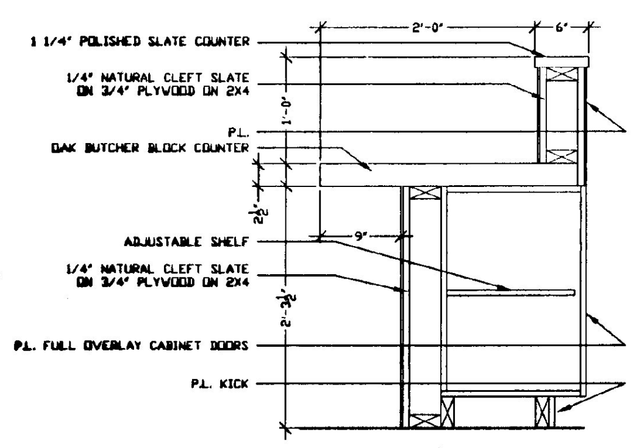

11 INFORMATION DESK SECTION
1" = 1'-0"

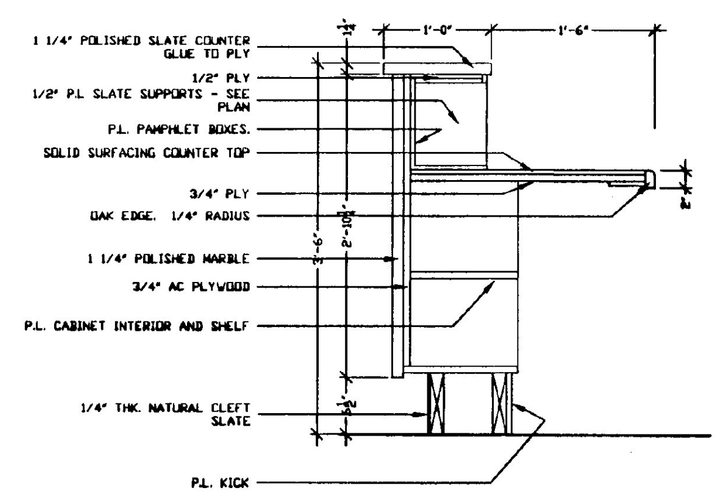

12 INFORMATION DESK SECTION
1" = 1'-0"

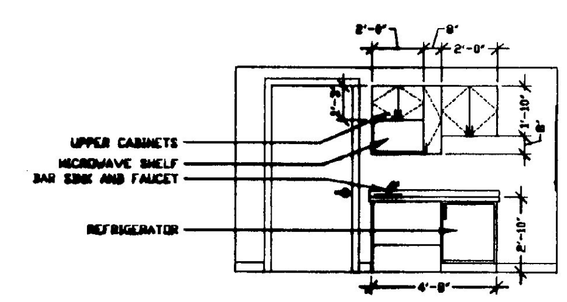

13 UNIT KITCHEN
1/4" = 1'-0"

RECORD DRAWING

NO.	DATE	REVISIONS	DRWN	CHKD

TIMOTHY D. SMITH & ASSOCIATES, PC ARCHITECTS
OLD RAILROAD STATION
802-442-8184
NORTH BENNINGTON, VERMONT 05257
FAX 802-442-5241

WRIGHT ENGINEERING, LTD.
CIVIL ENGINEERS
RUTLAND, VERMONT 05702-0170
802-775-0261 FAX 775-8015

ROBT W. HALL
CONSULTING ENGINEERS, INC.
AGAWAM, MASSACHUSETTS 01001-0002
413-789-0880 FAX 789-2896

T.J. BOYLE AND ASSOCIATES
LANDSCAPE ARCHITECTS
301 COLLEGE STREET
BURLINGTON, VERMONT 05401
802-658-3565 FAX 863-1562

REGISTERED ARCHITECT TIMOTHY D. SMITH No. 711 STATE OF VERMONT

PROJECT NO.IM 091-1 (30)
SOUTHEAST VERMONT WELCOME CENTER
GUILFORD, VERMONT

SHEET TITLE: WELCOME CNTR BLDG FOUNDATION DETAILS AND INFORMATION DESK

DSGN BY:
DRWN BY:
CHKD BY:
CHKD BY:

STATE OF VERMONT
AGENCY OF ADMINISTRATION
DEPARTMENT OF
BUILDINGS & GENERAL SERVICES

DATE: 1-16-98 SHEET NO._____OF_____SHEETS

A17