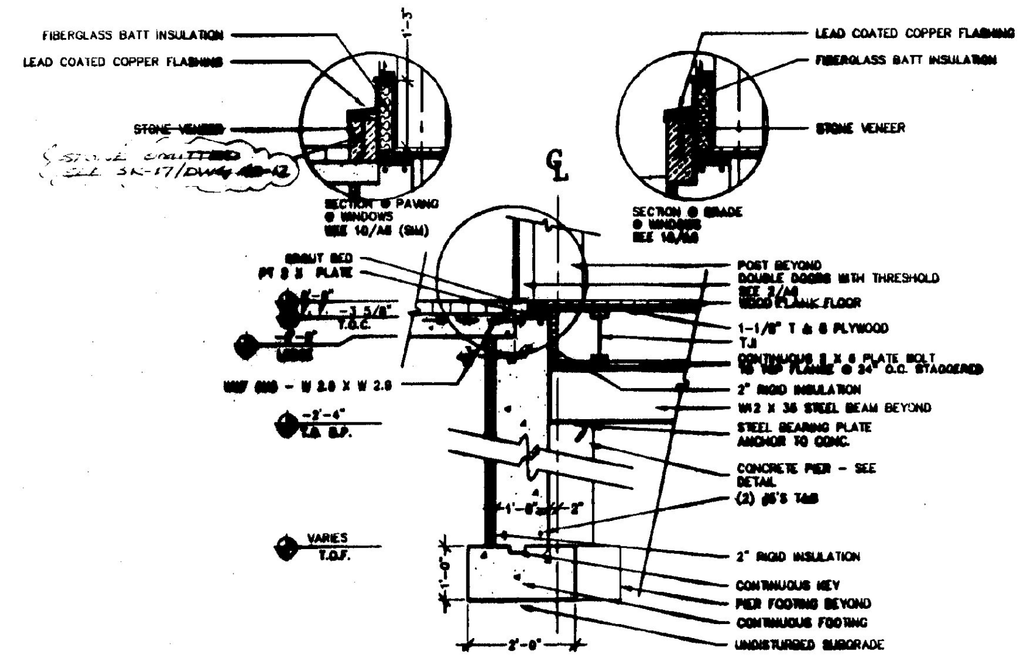

1 FOUNDATION DETAIL
1/2" = 1'-0"

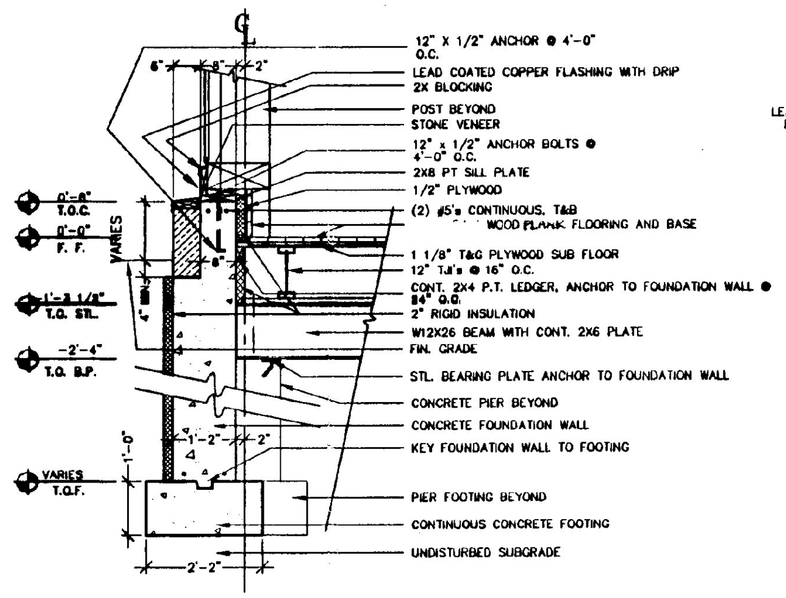

2 FOUNDATION DETAIL
1/2" = 1'-0"

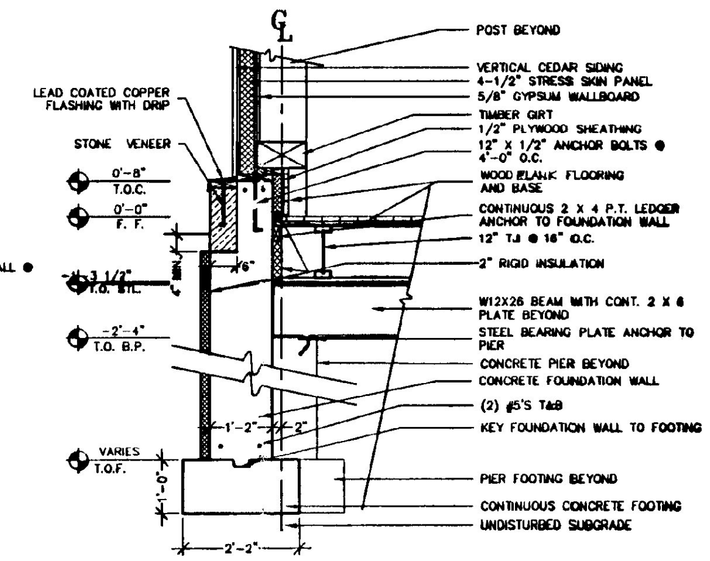

3 FOUNDATION DETAIL
1/2" = 1'-0"

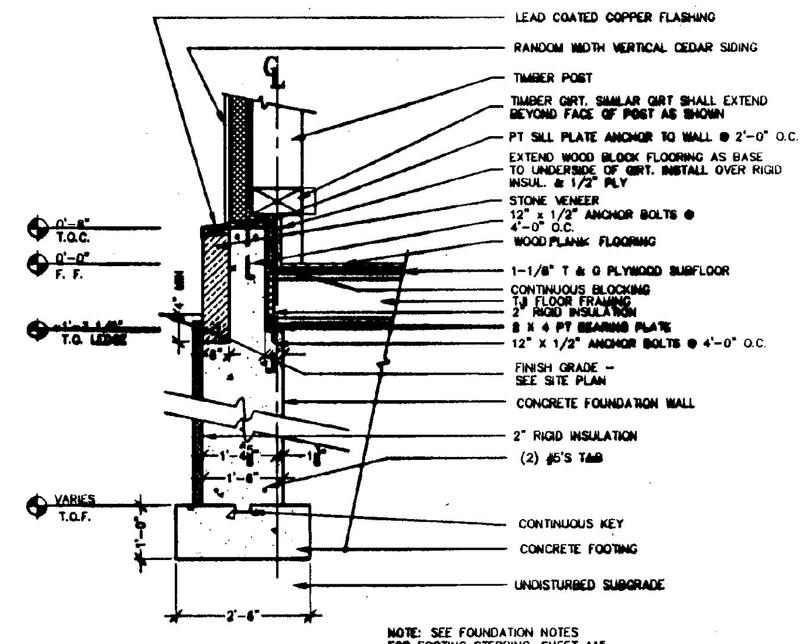

NOTE: SEE FOUNDATION NOTES FOR FOOTING STEPPING, SHEET A15

4 FOUNDATION DETAIL
1/8" = 1'-0"

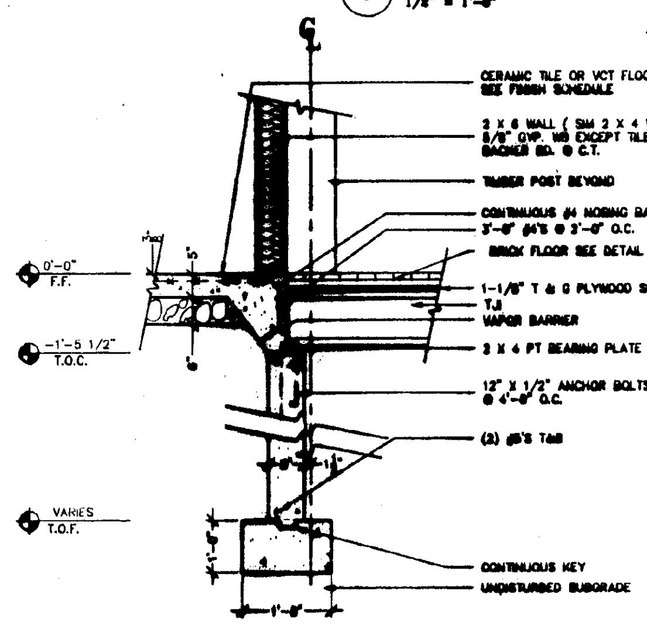

5 FOUNDATION DETAIL
1/2" = 1'-0"

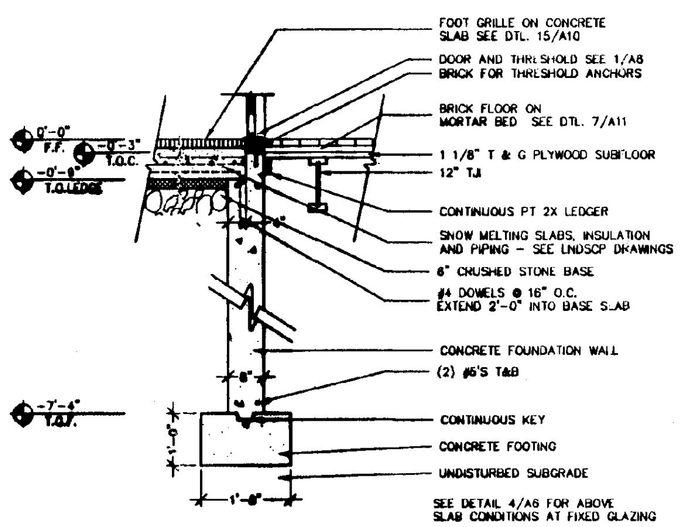

6 FOUNDATION DETAIL
1/2" = 1'-0"

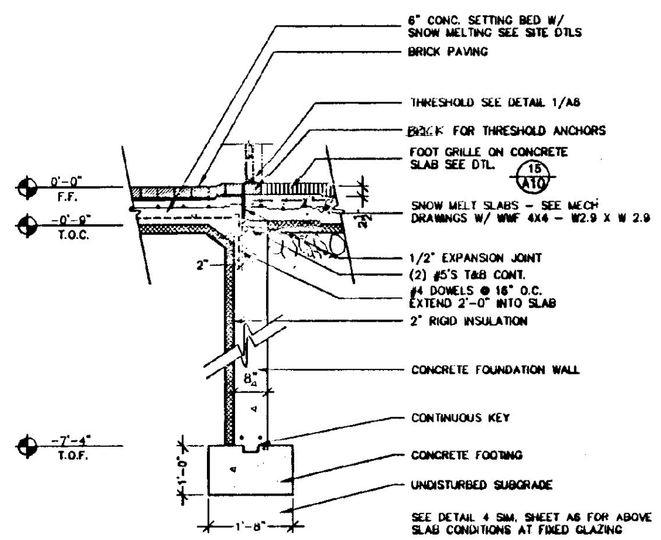

7 FOUNDATION DETAIL
1/2" = 1'-0"

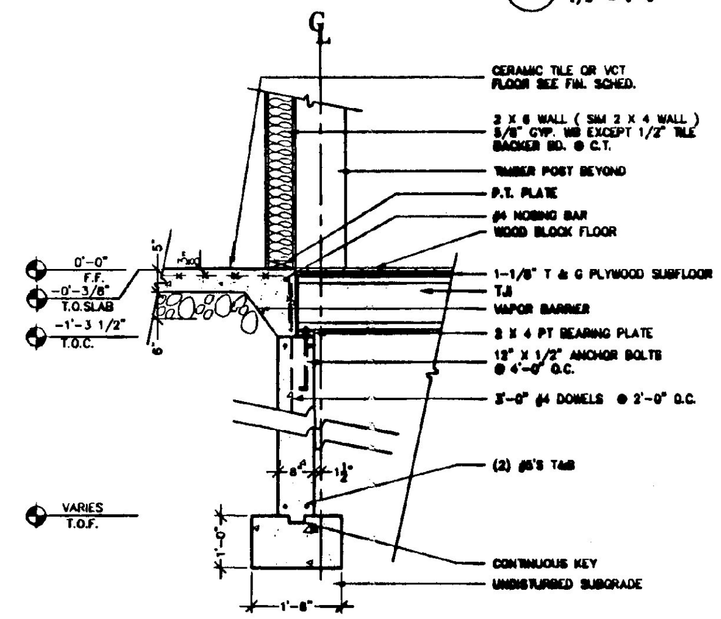

8 FOUNDATION DETAIL
1/2" = 1'-0"

RECORD DRAWING

NOTES:
SEE FOUNDATION PLAN, SHEET A4 FOR ELEVATION OF TOP OF CONCRETE SLAB
15 LB. FELT BOND BREAKER BTWN SLAB AND FOUNDATION WALL OR PIERS
SEE A14 FOR PIER AND FOOTING REINFORCEMENT

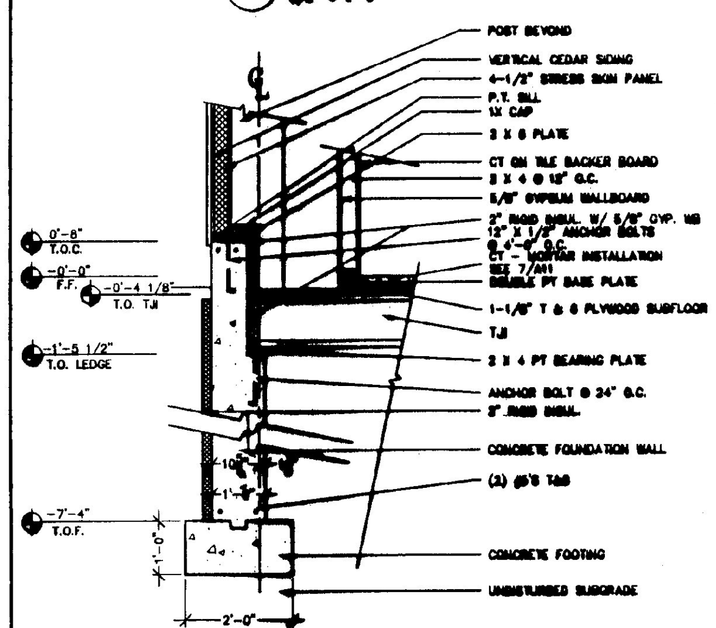

9 FOUNDATION DETAIL
1/2" = 1'-0"

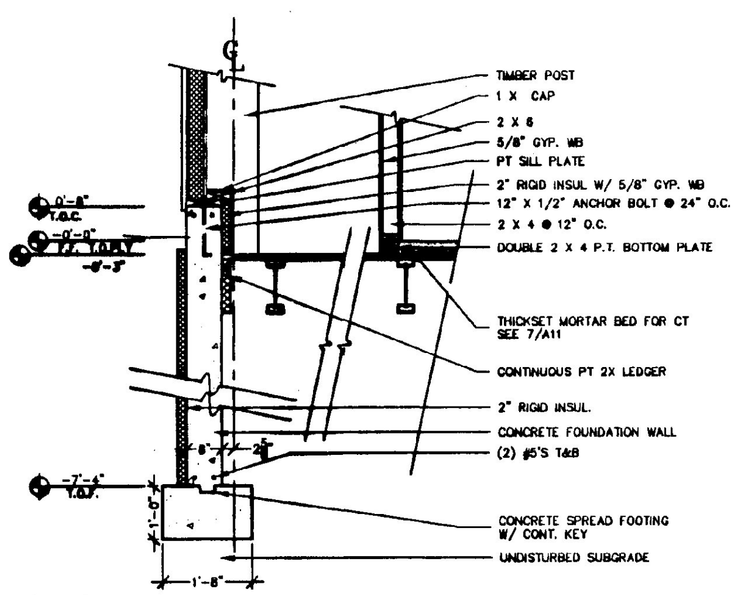

10 FOUNDATION DETAIL
1/2" = 1'-0"

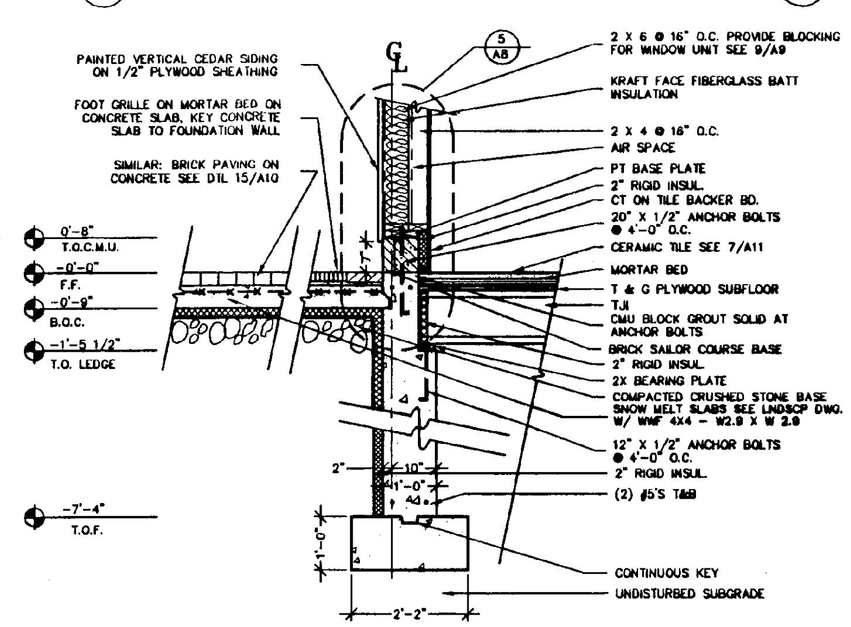

11 FOUNDATION DETAIL
1/2" = 1'-0"

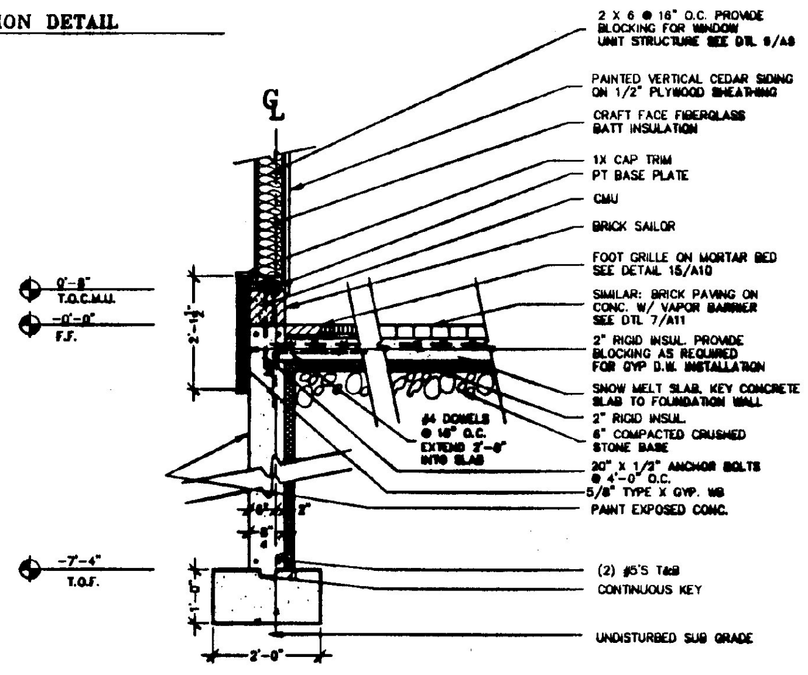

12 FOUNDATION DETAIL
1/2" = 1'-0"

NO.	DATE	REVISIONS	DRWN	CHKD

TIMOTHY D. SMITH & ASSOCIATES, PC ARCHITECTS
OLD RAILROAD STATION
802-442-8184
NORTH BENNINGTON, VERMONT 05257
FAX 802-442-5241

WRIGHT ENGINEERING, LTD.
CIVIL ENGINEERS
126 MERCHANTS ROW - P.O. BOX 170
BURLINGTON, VERMONT 05402-0170
802-862-8511 FAX 862-8615

ROBT W. HALL
CONSULTING ENGINEERS, INC.
540 MEADOW STREET EXTENSION, STE. 2
AGAWAM, MASSACHUSETTS 01001-6002
413-789-2020 FAX 789-2026

T.J. BOYLE AND ASSOCIATES
LANDSCAPE ARCHITECTS
301 COLLEGE STREET
BURLINGTON, VERMONT 05401
802-658-3555 FAX 863-1542

REGISTERED ARCHITECT TIMOTHY D. SMITH NO. 711 STATE OF VERMONT

PROJECT NO.IM 091-1 (30)
SOUTHEAST VERMONT WELCOME CENTER
GUILFORD, VERMONT

SHEET TITLE: WLCM CNTR BLDG FOUNDATION DETAILS

DSGN BY:
DRWN BY:
CHKD BY:
CHKD BY:

STATE OF VERMONT
AGENCY OF ADMINISTRATION
DEPARTMENT OF
BUILDINGS & GENERAL SERVICES

DATE: 1-16-98 SHEET NO._____OF_____SHEETS

A16