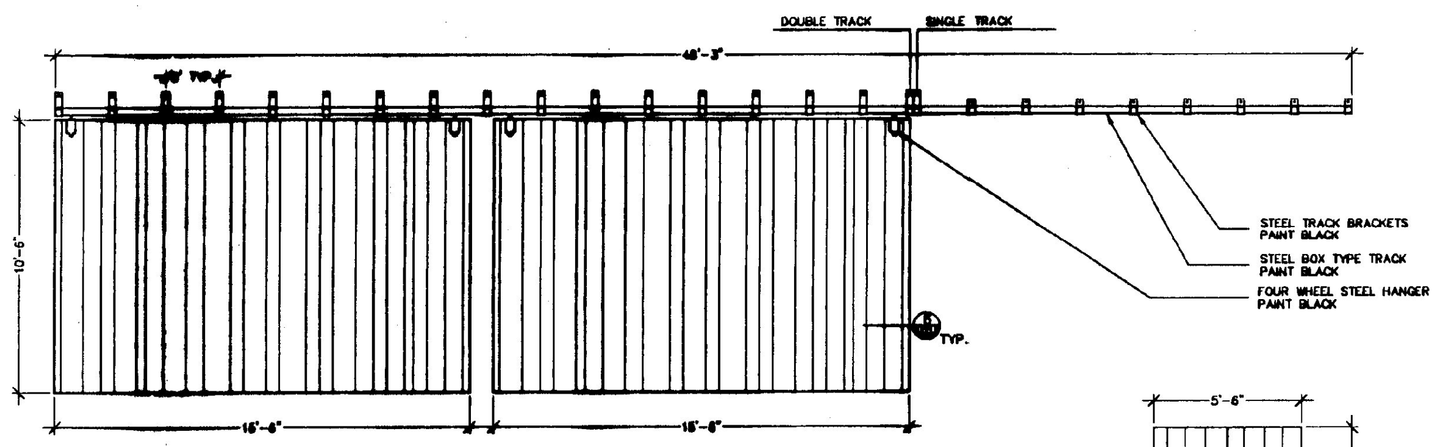

1 DOUBLE EXTERIOR SLIDING DOORS
1/4" = 1'-0"

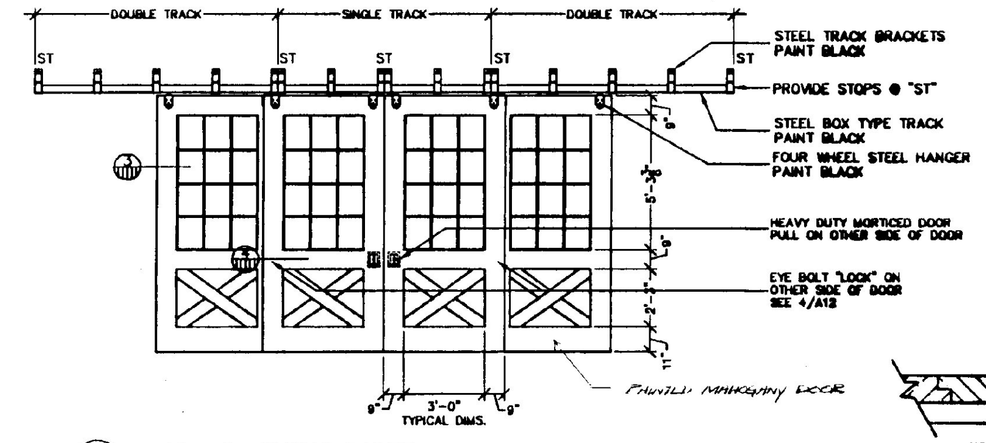

2 INTERIOR SLIDING DOORS
1/4" = 1'-0"

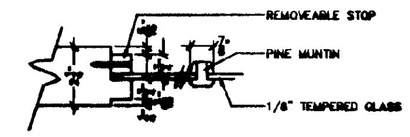

3 INTERIOR SLIDING DOOR GLAZING DETAIL
3" = 1'-0"

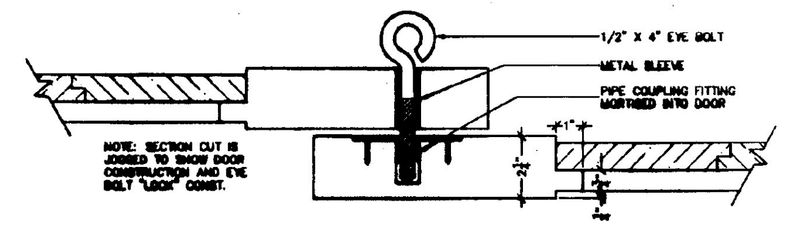

4 INTERIOR SLIDING DOOR SECTION
3" = 1'-0"

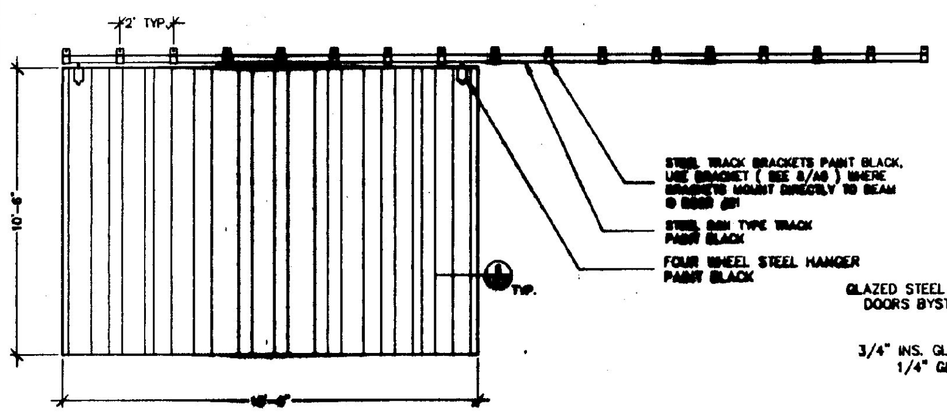

5 EXTERIOR SLIDING DOOR
1/4" = 1'-0"

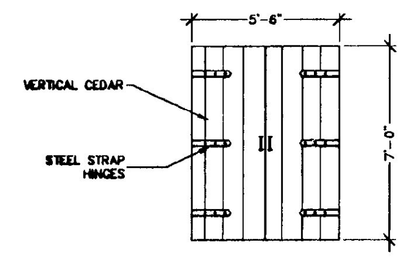

DOOR TYPE A
1/4" = 1'-0"

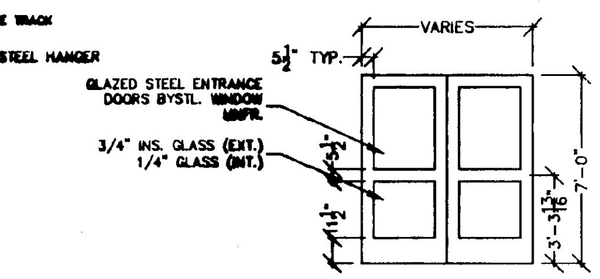

DOOR TYPE B
1/4" = 1'-0"

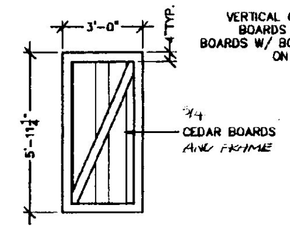

DOOR TYPE C
1/4" = 1'-0"

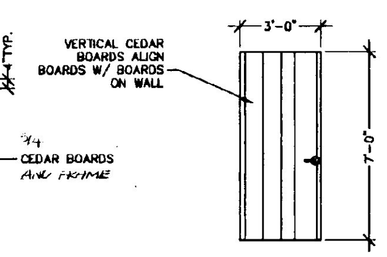

DOOR TYPE D
1/4" = 1'-0"

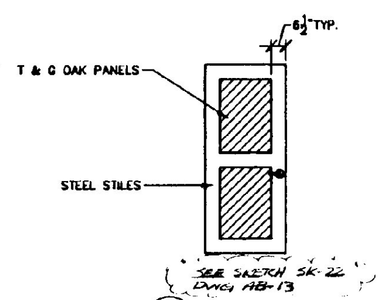

DOOR TYPE E
1/4" = 1'-0"

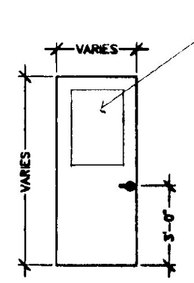

DOOR TYPE F
1/4" = 1'-0"

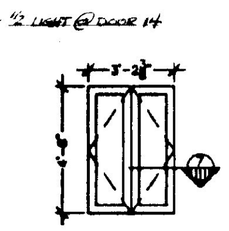

DOOR TYPE G
1/4" = 1'-0"

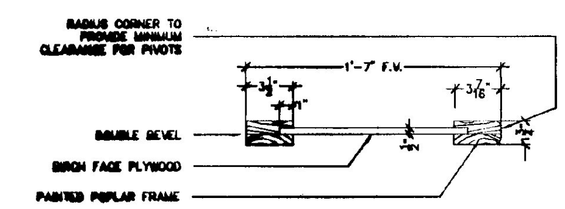

7 DIAPERING ROOM DOOR SECTION
1 1/2" = 1'-0"

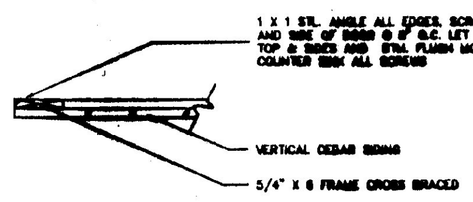

6 EXTERIOR SLIDING DOOR SECTION
1" = 1'-0"

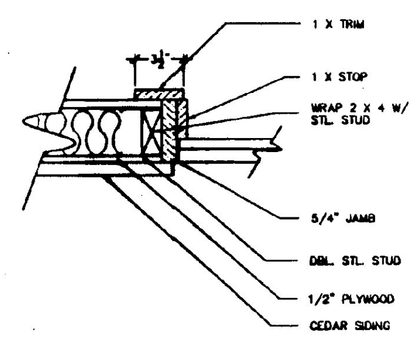

TYPE A DOOR JAMB SECTION
1 1/2" = 1'-0"

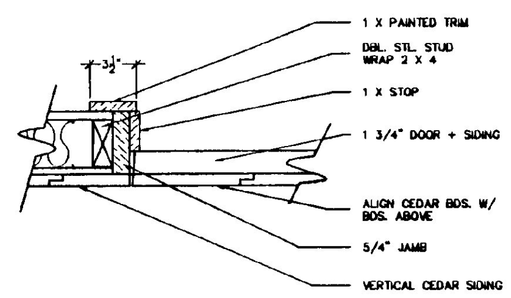

TYPE B DOOR JAMB SECTION
1 1/2" = 1'-0"

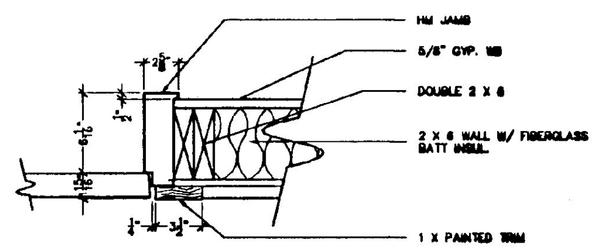

TYPE C DOOR JAMB SECTION
1 1/2" = 1'-0"

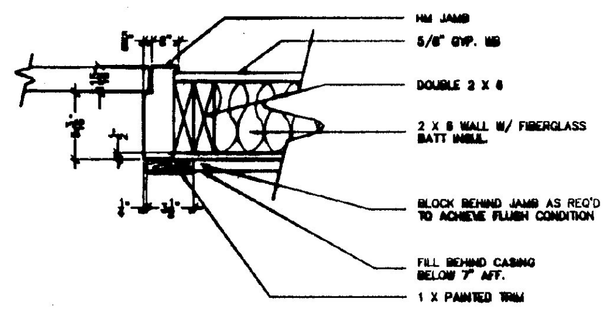

TYPE D DOOR JAMB SECTION
1 1/2" = 1'-0"

DOOR SCHEDULE – WELCOME CENTER							
NO.	SIZE	TYPE	FINISH	JAMB	SWING	HDW SET #	REMARKS
1	6'-4 1/2" X 7'-0" PAIR	GLAZED STL.	FACT. PAINT		LHR/RHR	1	SEE SHEET A6
2	6'-4 1/2" X 7'-0" PAIR	GLAZED STL.	FACT. PAINT		LHR/RHR	2	SEE SHEET A6
3	4'-6" X 9'-11 1/4 (4)	BARN	PAINT		SLIDING	3	SEE DRL. & TRIM SHEET
4	6'-4 1/2" X 7'-0" PAIR	GLAZED STL.	FACT. PAINT		LHR/RHR	1	SEE SHEET A6
5	3'-0" X 7'-0"	E	PAINT	G	LH	4	*GLAZE BRK PANEL IN HM FRAME
6	3'-0" X 7'-0"	E	PAINT	G	RH	4	SCREW PANEL TO FIXED GLAZING
7	3'-0" X 7'-0"	E	PAINT	G (SIM)	RH	5	STOP
8	3'-0" X 7'-0"	B	[illegible]	B	LHR	5	APPLY CEDAR BOARDS TO WB DOOR
9	3'-0" X 7'-0"	E	PAINT	E	RH	6	SEE CS-24/DWG AB-7 FOR REMOVED JAMB DETAIL
10	3'-0" X 7'-0"	F WD.	PAINT	H	LH	7	
11	3'-0" X 7'-0"	F WD.	PAINT	H	LH	6	
12	3'-0" X 7'-0"	F WD.	PAINT	H	LH	8	
13	3'-0" X 7'-0"	F STL.	PAINT	I	LHR	9	C LABEL DOOR AND JAMB
14	3'-0" X 6'-8"	F STL.	PAINT	C	LHR	10	MALL GLASS
15	3'-0" X 6'-8"	F STL.	PAINT	B	RH	11	
16	3'-0" X 4'-8"	G	PAINT	CT	DBL ACT	12	
17	3'-0" X 4'-8"	G	PAINT	CT	DBL ACT	12	
18	3'-0" X 4'-8"	G	PAINT	CT	DBL ACT	12	
19	3'-0 1/2" X 7'-0 1/2"	F STL.	PAINT	F	PRIVACY	13	
20	15'-6" X 10'-6" (2)	BARN	ACRYL STL.		DBL SLID BARN	14	SEE DRL. 6A THIS SHEET *
21	15'-6" X 10'-6"	BARN	ACRYL STL.		SLIDING BARN	15	SEE DRL. 6B THIS SHEET *
22	15'-6" X 10'-6"	BARN	ACRYL STL.		SLIDING BARN	15	SEE DRL. 6B THIS SHEET
23	3'-0" X 5'-11 1/4"	C	ACRYL STL.	A	RHR	16	
24	3'-0" X 7'-0"	F STL.	PAINT	I	RH	9	C LABEL DOOR AND JAMB
25	3'-0" X 5'-11 1/4"	C	ACRYL STL.	A	LHR	16	
26	3'-0" X [illegible]	F STL.	PAINT	I	RHR	9	C LABEL DOOR AND JAMB
27	2'-9" X 7'-0" X 1 3/4"	A	PAINT		LHR/RHR	17	SEE DETAILS 7/A10 AND 8/A10

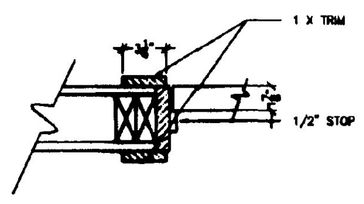

TYPE E DOOR JAMB SECTION
1 1/2" = 1'-0"

SEE CS-24/DWG AB-7 FOR REMOVED JAMB DETAIL

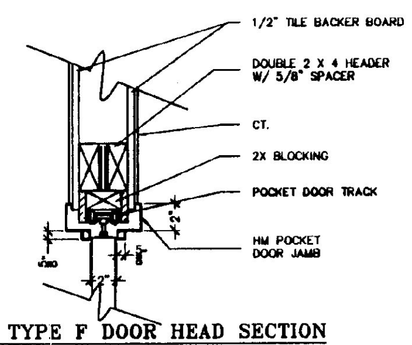

TYPE F DOOR HEAD SECTION
1 1/2" = 1'-0"

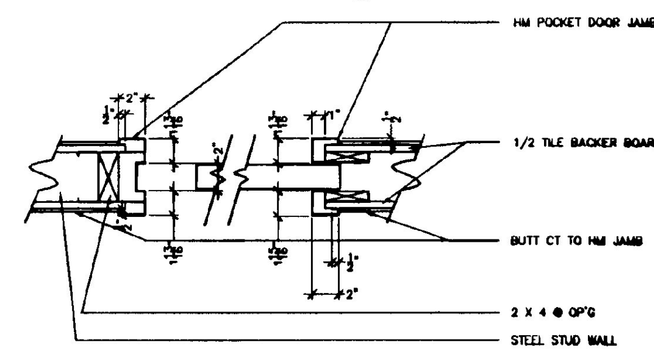

TYPE F DOOR JAMB SECTION
1 1/2" = 1'-0"

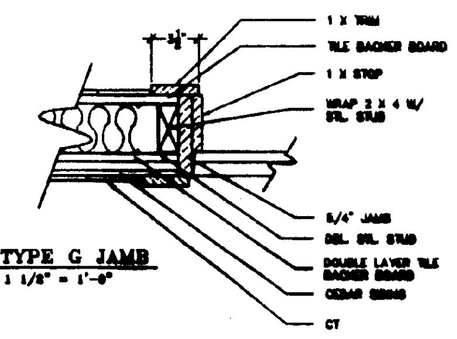

TYPE G JAMB
1 1/2" = 1'-0"

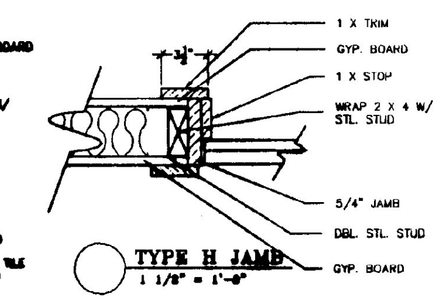

TYPE H JAMB
1 1/2" = 1'-0"

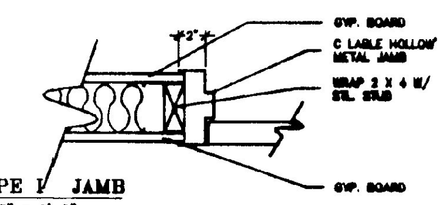

TYPE I JAMB
1 1/2" = 1'-0"

* SEE SKETCHES SK-A1, SK-A2, & SK-A3 / DWG AB-13 & AB-14 FOR SLIDING DOOR 20 & 21 HARDWARE ELIMINATION

RECORD DRAWING

NO.	DATE	REVISIONS	DRWN	CHKD

TIMOTHY D. SMITH & ASSOCIATES, PC ARCHITECTS
OLD RAILROAD STATION
802-442-8184
NORTH BENNINGTON, VERMONT 05257
FAX 802-442-5241

WRIGHT ENGINEERING, LTD.
CIVIL ENGINEERS
128 MERCHANTS ROW – P.O. BOX 178
RUTLAND, VERMONT 05702-0178
802-775-2141 FAX 775-5015

ROBT W. HALL
CONSULTING ENGINEERS, INC.
540 MEADOW STREET EXTENSION, STE. 2
AGAWAM, MASSACHUSETTS 01001-0002
413-789-0280 FAX 789-2896

T.J. BOYLE AND ASSOCIATES
LANDSCAPE ARCHITECTS
301 COLLEGE STREET
BURLINGTON, VERMONT 05401
802-658-3565 FAX 863-1562

REGISTERED ARCHITECT TIMOTHY D. SMITH NO. 711 STATE OF VERMONT

PROJECT NO.IM 091-1 (30)
SOUTHEAST VERMONT WELCOME CENTER
GUILFORD, VERMONT

SHEET TITLE: WLCM CNTR BLDG DOORS

DSGN BY:
DRWN BY:
CHKD BY:
CHKD BY:

STATE OF VERMONT
AGENCY OF ADMINISTRATION
DEPARTMENT OF
BUILDINGS & GENERAL SERVICES

DATE: 1-16-98 SHEET NO._____OF_____SHEETS

A12