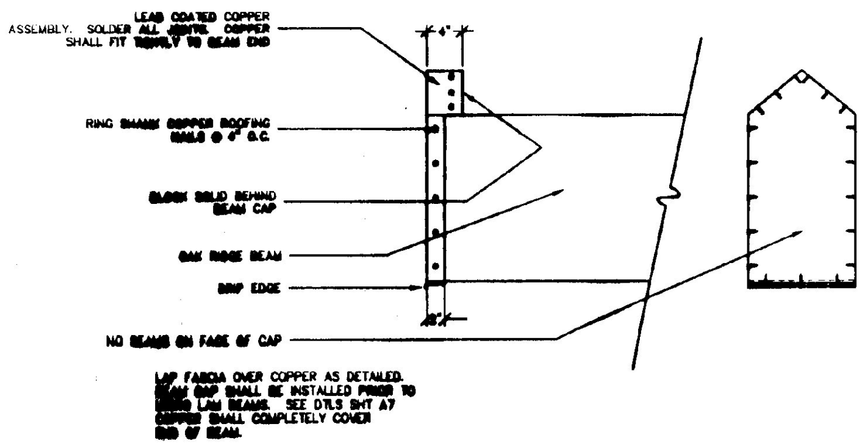

1 RIDGE BEAM FLASING DETAIL
1" = 1'-0"

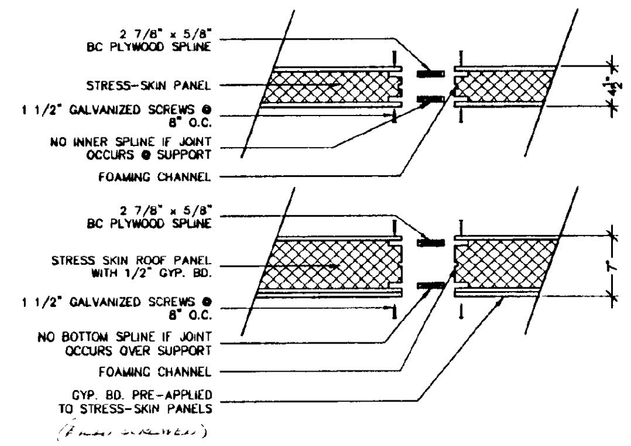

3 TYPICAL STRESS-SKIN SPLINE PANEL CONNECTIONS
1" = 1'-0"

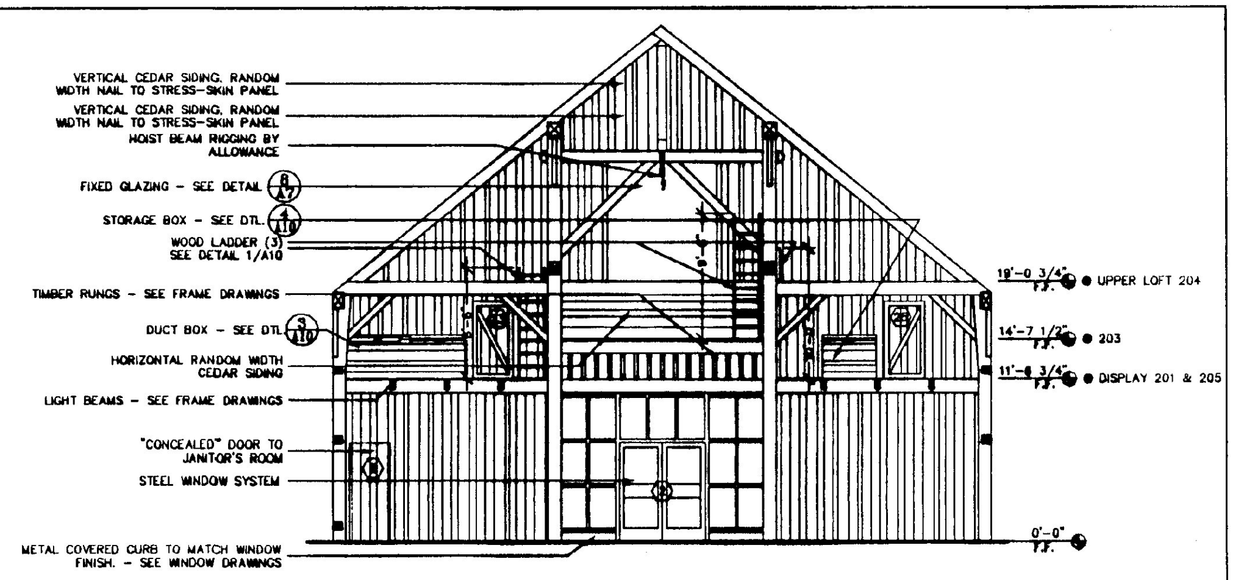

7 MAIN HALL INTERIOR ELEVATION FACING NORTH
1/8" = 1'-0"

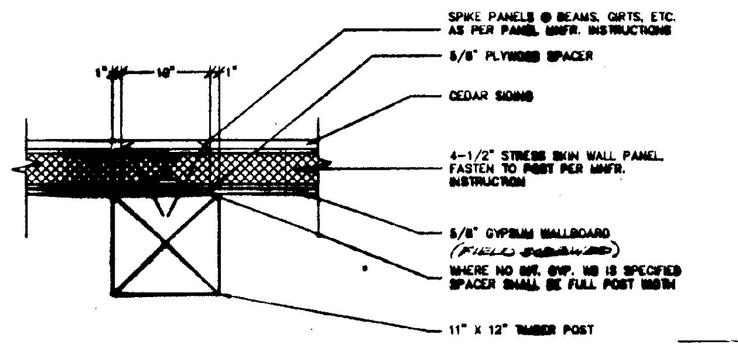

2 PANEL TO TIMBER POST CONNECTION
1" = 1'-0"

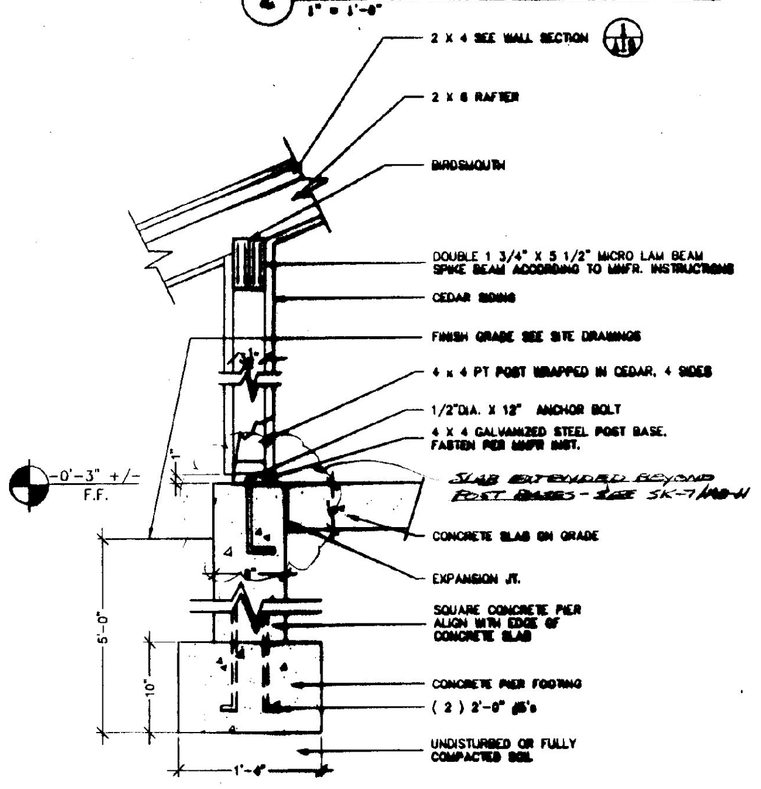

4 PORCH POST SECTION
1" = 1'-0"

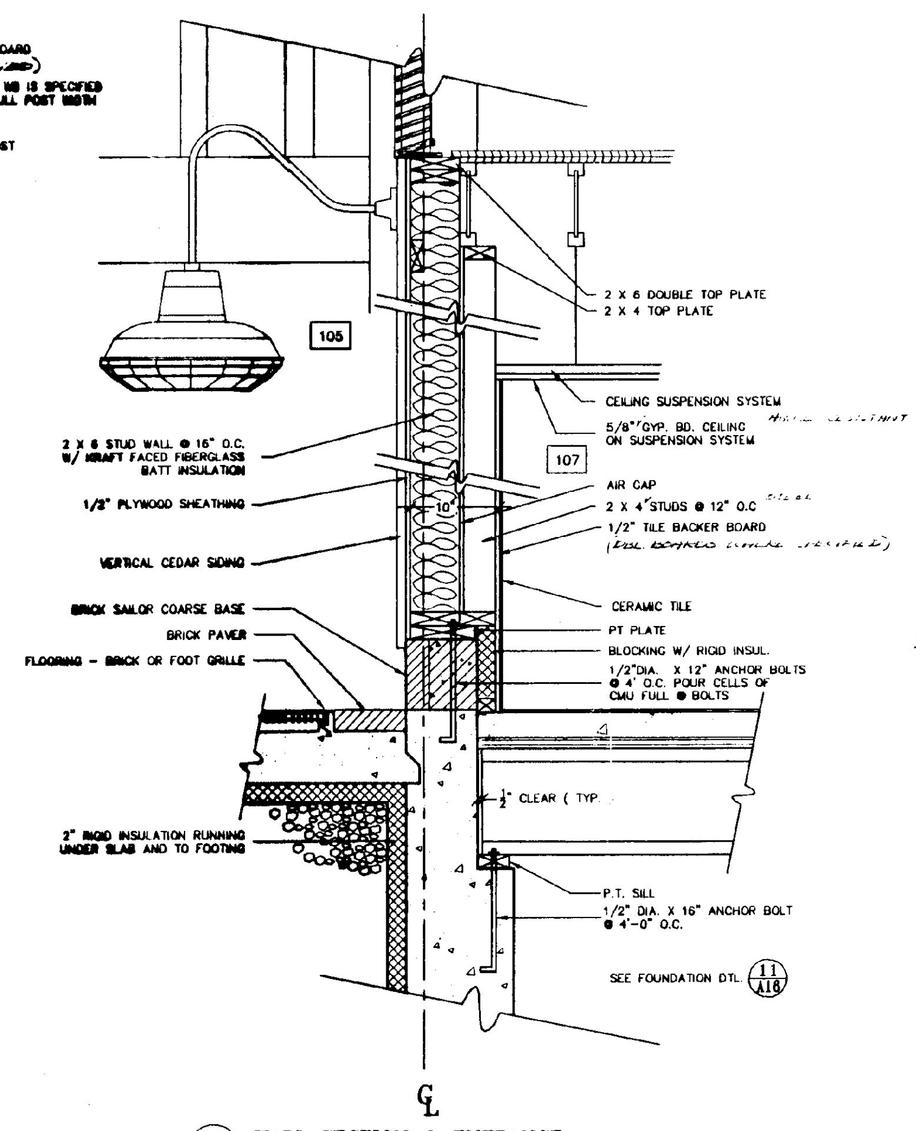

5 WALL SECTION @ ENTRANCE
1" = 1'-0"

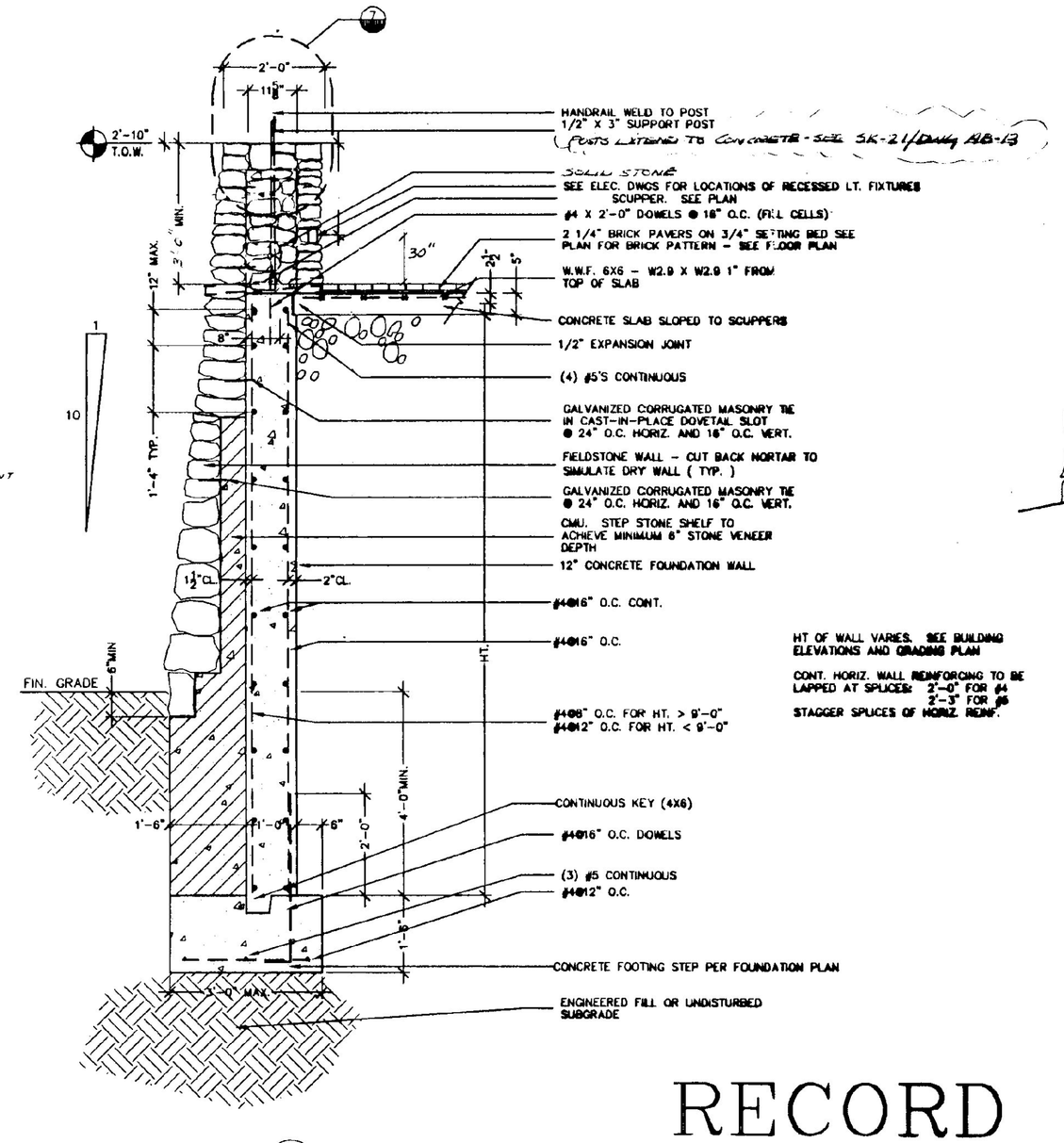

6 SILO BASE WALL SECTION
1/2" = 1'-0"

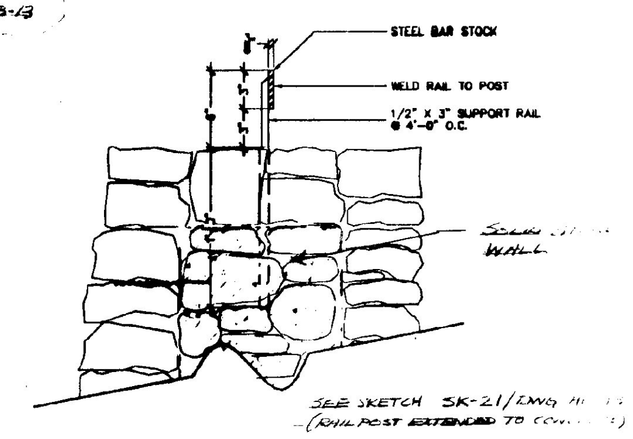

7 HANDRAIL SECTION
1 1/8" = 1'-0"

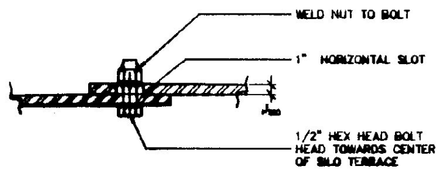

8 HANDRAIL EXPANSION JOINT PLAN
3" = 1'-0"

RECORD DRAWING

FINISH FLOOR 0'-0" = 126.42 METERS

NO.	DATE	REVISIONS	DRWN	CHKD

TIMOTHY D. SMITH & ASSOCIATES, PC ARCHITECTS
OLD RAILROAD STATION
802-442-8184
NORTH BENNINGTON, VERMONT 05257
FAX 802-442-5241

WRIGHT ENGINEERING, LTD.
CIVIL ENGINEERS
100 MERCHANTS ROW - P.O. BOX 170
ROST W. HALL
CONSULTING ENGINEERS, INC.
540 MEADOW STREET EXTENSION, STE. 2
413-788-8260 FAX 788-2280
T.J. BOYLE AND ASSOCIATES
LANDSCAPE ARCHITECTS
501 COLLEGE STREET
BURLINGTON, VERMONT 05401
802-658-3555 FAX 863-1042

REGISTERED ARCHITECT TIMOTHY D. SMITH U.S. OF AMERICA STATE OF VERMONT

PROJECT NO.IM 091-1 (30)
SOUTHEAST VERMONT WELCOME CENTER
GUILFORD, VERMONT

SHEET TITLE: WELCOME CENTER BLDG EXTERIOR DETAILS

DSGN BY:
DRWN BY:
CHKD BY:
CHKD BY:

STATE OF VERMONT
AGENCY OF ADMINISTRATION
DEPARTMENT OF
BUILDINGS & GENERAL SERVICES

DATE: 1-16-98 SHEET NO._____OF_____SHEETS

A8