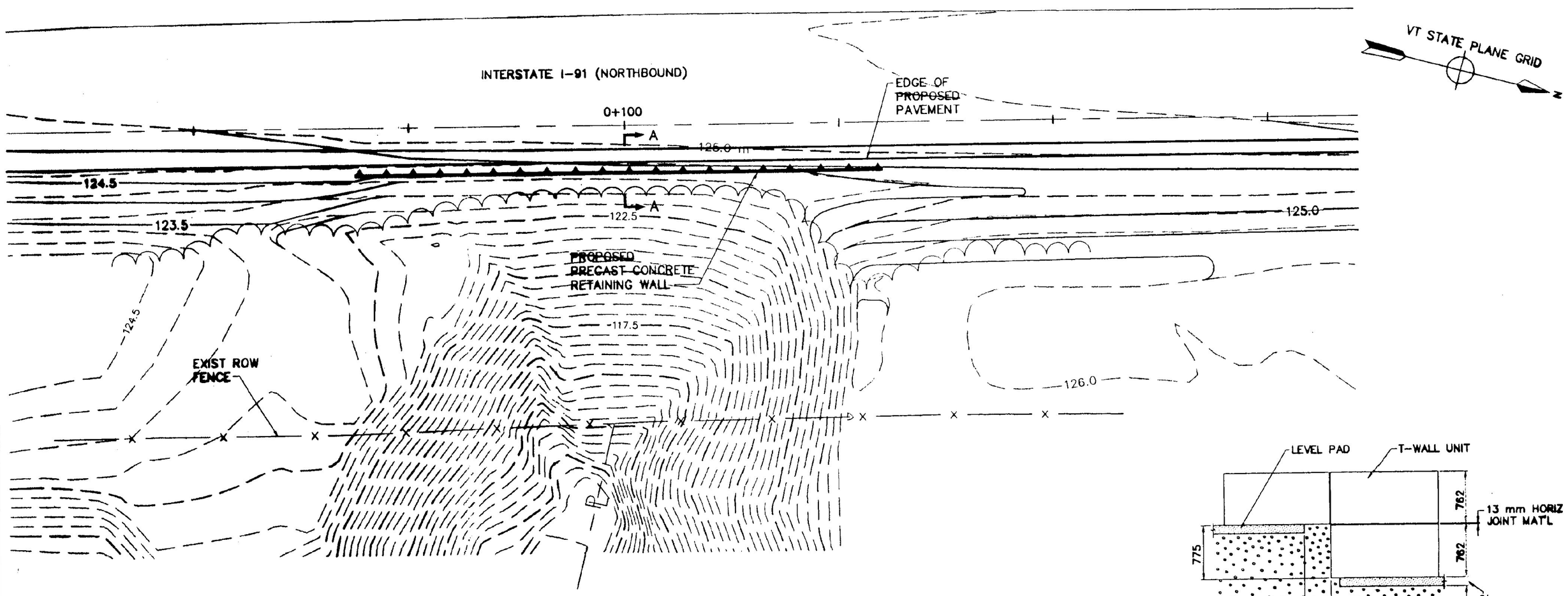

RETAINING WALL PLAN

SCALE: 1:250

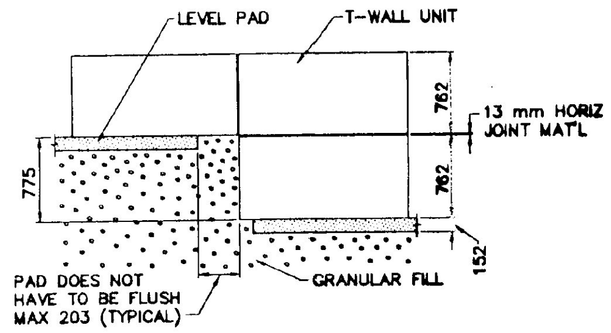

ELEVATION (PARALLEL TO FRONT FACE OF WALL)

TYPICAL LEVEL PAD/STEP DETAIL

NOT TO SCALE

RETAINING WALL CHARACTERISTICS AND ASSUMPTIONS

WALL HEIGHT:	AS SHOWN
BATTER:	NONE
TRAFFIC SURCHARGE:	600 mm OF SOIL
SLOPE ANGLE:	AS SHOWN
BACKFILL:	MIN INTERNAL FRICTION: 34° WEIGHT: 17.3 kN/m3 COHESION: 0 kPa
SUB-GRADE:	INTERNAL FRICTION: 34° (ASSUMED) WEIGHT: 17.3 kN/m3 (ASSUMED) COHESION: 0 kPa
MINIMUM REQUIRED FACTORS OF SAFETY:	OVERTURNING: 2.0 SLIDING: 1.5 PULLOUT: 1.5 BEARING: 2.0
CALCULATED MINIMUM FACTOR OF SAFETY:	OVERTURNING: 8.21 SLIDING: 2.65 PULLOUT: 4.74 SLIP: 1.3 MIN
MAXIMUM APPLIED BEARING PRESSURE:	72 kPa

WALL NOTES:

1. LEVELING PAD NOT SHOWN FOR CLARITY, SEE SECTION, THIS SHT.
2. STEM LENGTH AND DEPTH BELOW FINISH GRADE OF BOTTOM COURSE OF WALL NECESSARY FOR GLOBAL SLIP STABILITY.
3. SELECT BACKFILL:
   SHALL MEET REQUIREMENTS OF SPECIFICATION SECTION 02300, 2.07 (GRANULAR FILL)
4. T-WALL UNITS:
   SHALL MEET REQUIREMENTS OF SPECIFICATION SECTION 02918. MINIMUM 28-DAY COMPRESSIVE STRENGTH SHALL BE 27.6 MPa. THE EXPOSED FACES SHALL HAVE A STEEL FORM FINISH.
5. JOINTS:
   HORIZONTAL:
   13 x 100 PREMOLDED RESILIENT JOINT FILLER, ASTM D1751
   VERTICAL:
   6 mm JOINT WIDTH
   300 mm WIDE FILTER FABRIC (MIRAFI 140NL)
   SHEAR KEY:
   6 mm PREFORMED CORK FILLER, AASHTO M153, TYPE I OR POLYETHYLENE, FED SPEC PPP-C-1752D BETWEEN SHEAR KEY AND STEMS
6. LEVELING PAD:
   152 MM THK x 305 MIN WIDE
   CAST-IN-PLACE, UNREINFORCED CLASS B CONCRETE (27.6 MPa)
   GRADE TOLERANCE FOR TOP OF PAD - 6 mm IN 3 m
7. COMPACTION:
   NATIVE SUB-GRADE TO REMAIN AND SELECT BACKFILL SHALL BE COMPACTED TO 98% OPTIMUM UNIT WEIGHT IN ACCORDANCE WITH ASTM D698, STANDARD PROCTOR.
8. RETAINING WALL COMPONENTS BY THE FORT MILLER COMPANY, SCHUYLERVILLE, NY. OR APPROVED EQUAL.

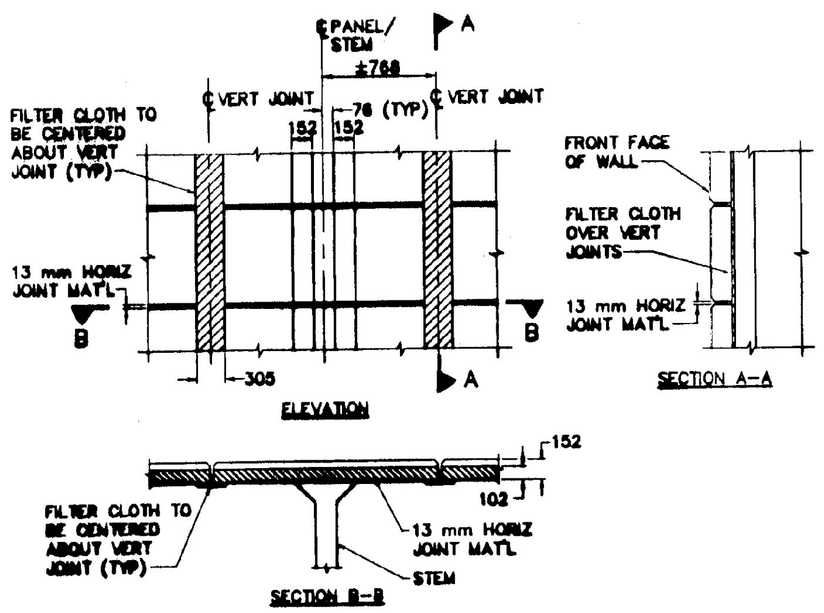

WALL JOINT MATERIAL DETAILS

NOT TO SCALE

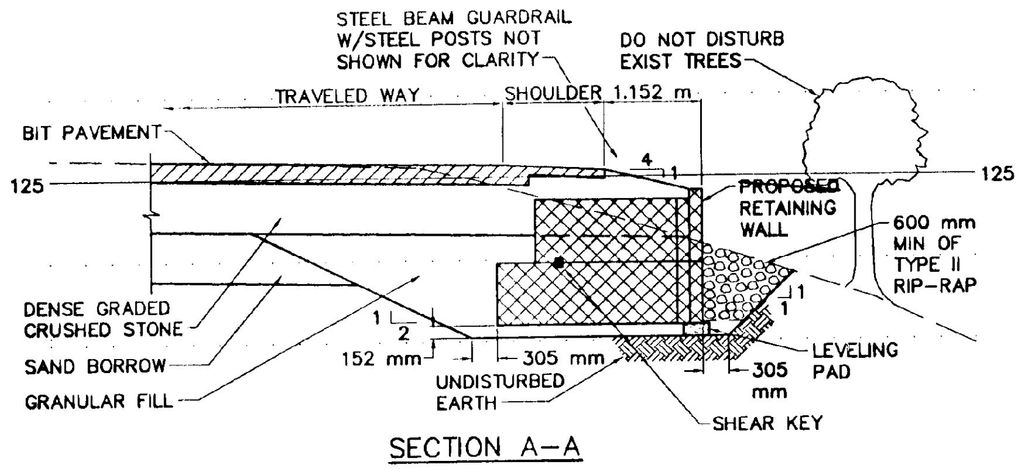

SECTION A-A

SCALE: 1:50

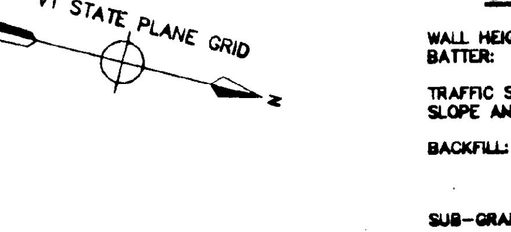

TYPICAL PANEL NOTATION DETAIL

NOT TO SCALE

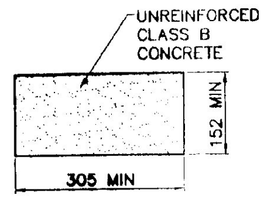

LEVELING PAD DETAIL

NOT TO SCALE

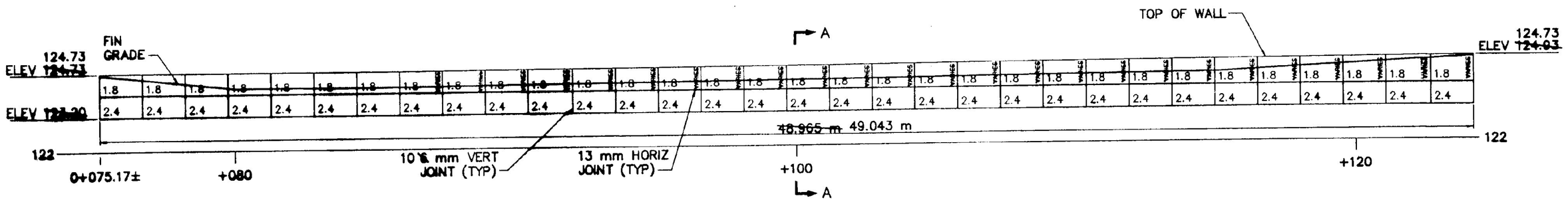

RETAINING WALL ELEVATION

SCALE: 1:100

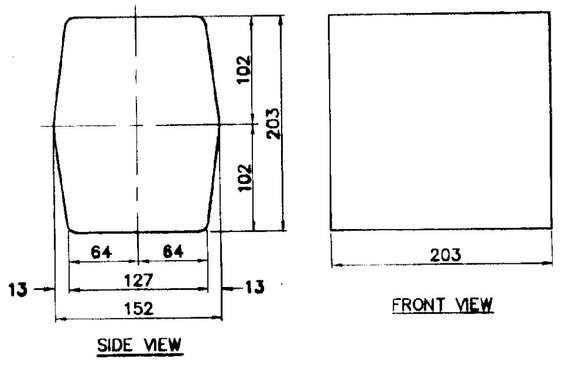

CONCRETE SHEAR KEY DETAIL

NOT TO SCALE

(FURNISHED BY T-WALL MFR)

RECORD DRAWING

SHOWN PICTORALLY MAY NOT BE TO SCALE

THESE AS-BUILT OR RECORD DRAWINGS HAVE BEEN PREPARED, IN PART, ON THE BASIS OF INFORMATION COMPILED AND FURNISHED BY OTHERS. THE ENGINEER WILL NOT BE RESPONSIBLE FOR ANY ERRORS OR OMISSIONS WHICH HAVE BEEN INCORPORATED INTO THIS DOCUMENT AS A RESULT OF INFORMATION BY OTHERS.

Metric

NO.	DATE	REVISIONS	DRWN	CHKD
1	12/98	AS-BUILT INFORMATION ADDED	DSM	KAS

TIMOTHY D. SMITH & ASSOCIATES, PC ARCHITECTS
OLD RAILROAD STATION
802-442-8184
NORTH BENNINGTON, VERMONT 05257
FAX 802-442-5241

WRIGHT ENGINEERING, LTD.
CIVIL ENGINEERS
126 MERCHANTS ROW - P.O. BOX 170
RUTLAND, VERMONT 05702-0170
802-775-2611 FAX 775-2015

ROBT W. HALL
CONSULTING ENGINEERS, INC.
640 MEADOW STREET EXTENSION, STE. 2
AGAWAM, MASSACHUSETTS 01001-0002
413-789-0860 FAX 789-3296

T.J. BOYLE AND ASSOCIATES
LANDSCAPE ARCHITECTS
301 COLLEGE STREET
BURLINGTON, VERMONT 05401
802-658-3555 FAX 863-1562

STATE OF VERMONT
KEVIN A. SMITH
No. 5864
REGISTERED PROFESSIONAL ENGINEER

PROJECT NO.IM 091-1 (30)

SOUTHEAST VERMONT WELCOME CENTER

GUILFORD, VERMONT

SHEET TITLE: PRECAST CONCRETE RETAINING WALL PLAN, ELEVATION AND DETAILS

DSGN BY: KAS
DRWN BY: DSM
CHKD BY: KAS
CHKD BY: KAS

STATE OF VERMONT
AGENCY OF ADMINISTRATION

DEPARTMENT OF BUILDINGS & GENERAL SERVICES

DATE: 1-16-98 SHEET NO. ____ OF ____ SHEETS

C46

C:\ACAD12\95010N\95010-46A Mon Jan 24 15:47:19 2000