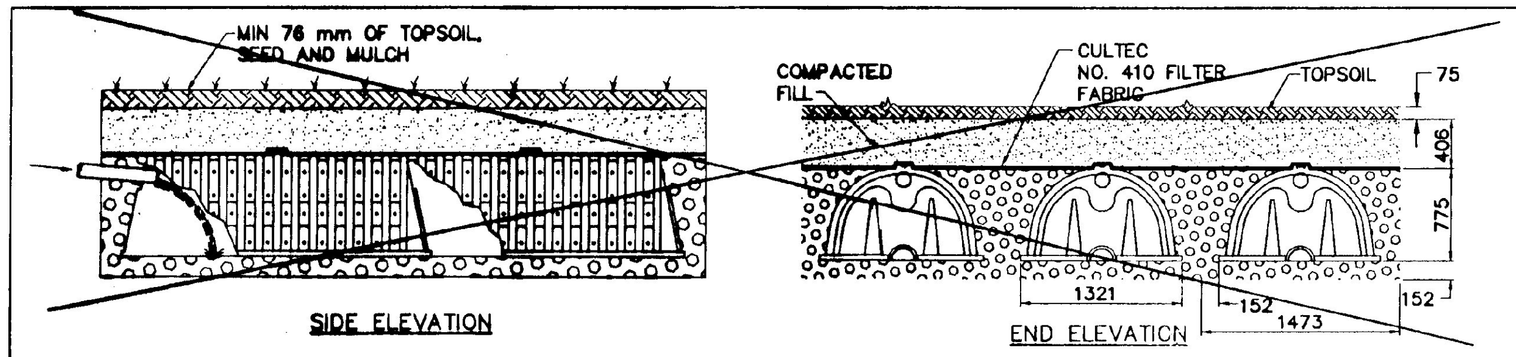

STORM WATER INFILTRATION SYSTEM DETAILS

NOT TO SCALE

RECORD DRAWING

SHOWN PICTORALLY
MAY NOT BE TO SCALE

THESE AS-BUILT OR RECORD DRAWINGS HAVE BEEN PREPARED, IN PART, ON THE BASIS OF INFORMATION COMPILED AND FURNISHED BY OTHERS. THE ENGINEER WILL NOT BE RESPONSIBLE FOR ANY ERRORS OR OMISSIONS WHICH HAVE BEEN INCORPORATED INTO THIS DOCUMENT AS A RESULT OF INFORMATION BY OTHERS.

DETAIL OF WALL 'A' & WALL 'B'

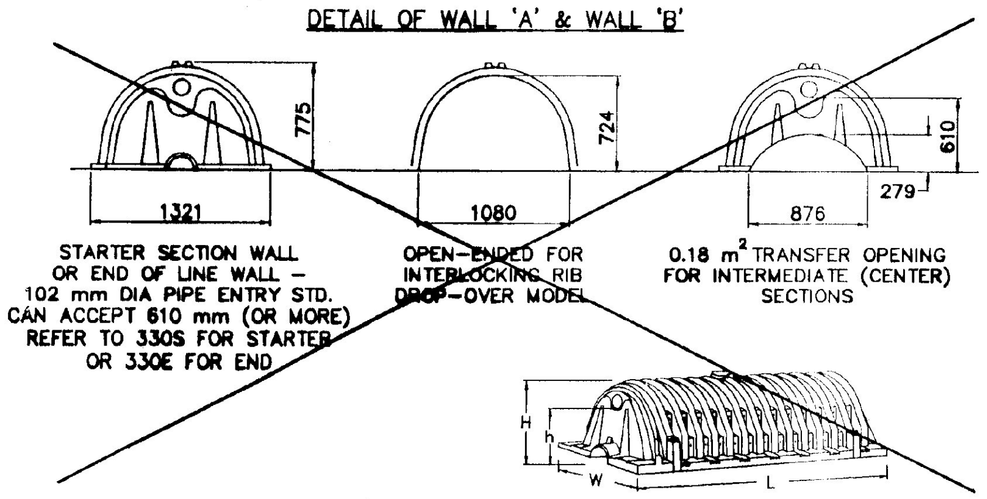

STARTER SECTION WALL OR END OF LINE WALL – 102 mm DIA PIPE ENTRY STD. CAN ACCEPT 610 mm (OR MORE) REFER TO 330S FOR STARTER OR 330E FOR END

OPEN-ENDED FOR INTERLOCKING RIB DROP-OVER MODEL

0.18 m^2 TRANSFER OPENING FOR INTERMEDIATE (CENTER) SECTIONS

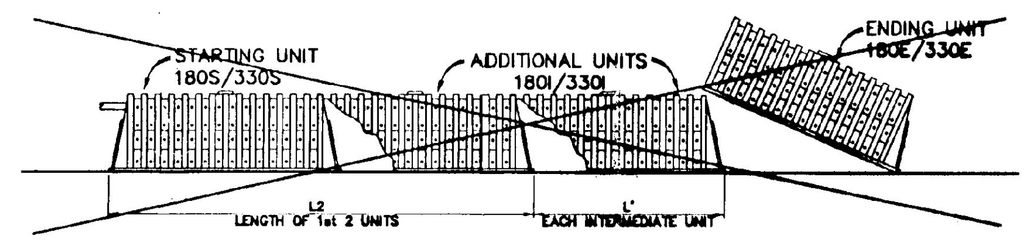

PLANS DEPICT CULTEC RECHARGER 330 INFILTRATION SYSTEM WITH VORTECHNICS GRIT/GREASE TRAPS. OTHER MANUFACTURER/ SYSTEMS MAY BE APPROVED AS EQUAL BY THE ENGINEER. CONTRACTOR TO SUBMIT SITE SPECIFIC MANUFACTURER CERTIFIED ASSEMBLY PLANS INCLUDING DETAILED LAYOUT, ELEVATIONS AND CONSTRUCTION DETAILS. SEE SPECIFICATIONS FOR BASIS OF DESIGN.

CHAMBER MODEL	RECHARGER 330
DIMENSIONS L	2286
W	1321
H	775
h	610
L2	4167
L'	1905
CAPACITY (liters)	1575
(cubic m)	1.57
RECOMMENDED DESIGN UNIT DATA	
STONE SEPARATION SINGLE/MULTI-LEVEL	152
STONE BASE SINGLE/MULTI-LEVEL	152
UNIT WIDTH SINGLE/MULTI-LEVEL	1473
UNIT HEIGHT SINGLE/MULTI-LEVEL	927
UNIT CAPACITY (c.m.) SINGLE/MULTI-LEVEL	0.29

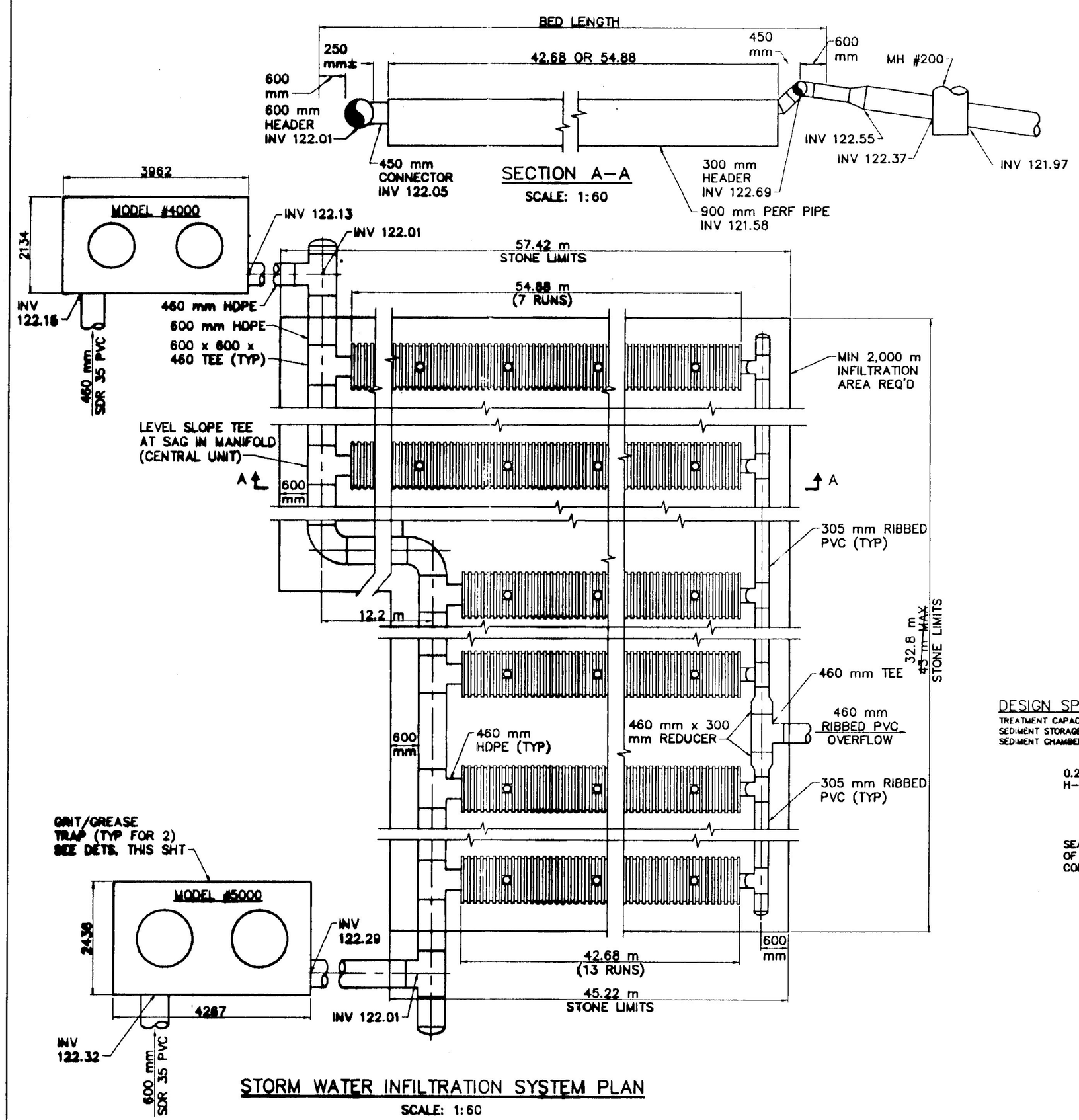

STORM WATER INFILTRATION SYSTEM PLAN

SCALE: 1:60

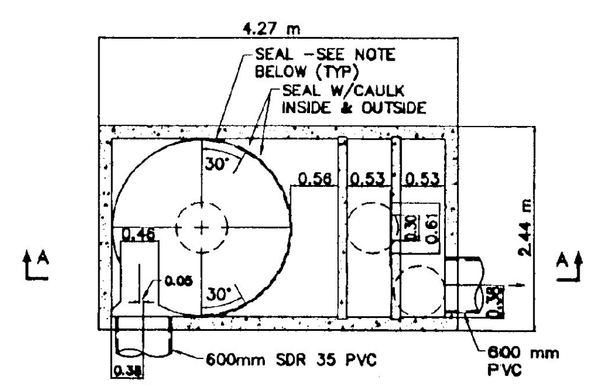

PLAN VIEW B–B

DESIGN SPECIFICATIONS:
TREATMENT CAPACITY: 0.24 m^3/SEC
SEDIMENT STORAGE: 2.48 m^3
SEDIMENT CHAMBER DIA: 2.13 m MIN.

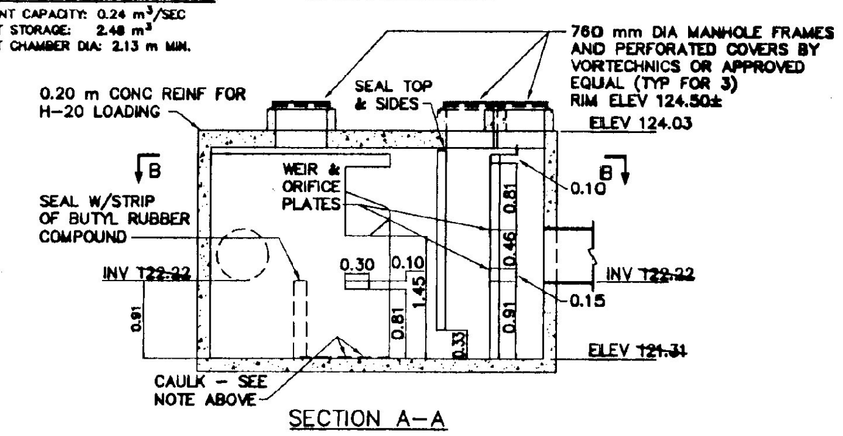

SECTION A–A

MODEL #5000 GRIT/GREASE TRAP

NOT TO SCALE

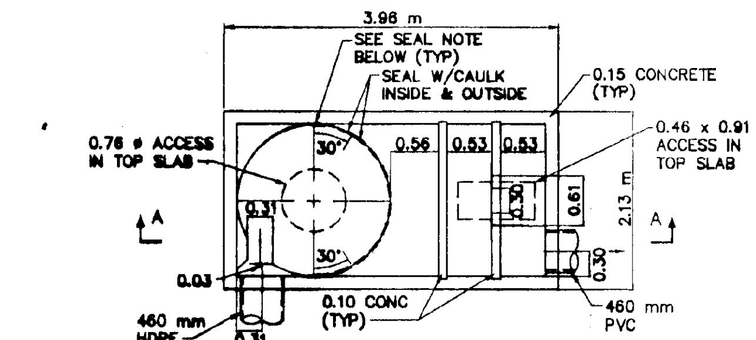

PLAN VIEW B–B

DESIGN SPECIFICATIONS:
TREATMENT CAPACITY: 0.17 m^3/SEC
SEDIMENT STORAGE: 1.91 m^3
SEDIMENT CHAMBER DIA: 1.83 m MIN.

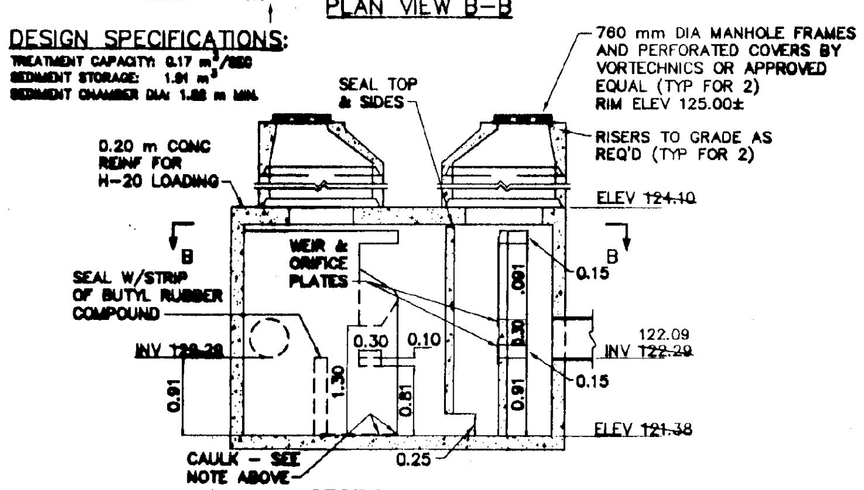

SECTION A–A

MODEL #4000 GRIT/GREASE TRAP

NOT TO SCALE

Metric

NO.	DATE	REVISIONS	DRWN	CHKD
1	12/99	AS-BUILT INFORMATION ADDED	DSM	KAS

TIMOTHY D. SMITH & ASSOCIATES, PC ARCHITECTS
OLD RAILROAD STATION
802-442-8184
NORTH BENNINGTON, VERMONT 05257
FAX 802-442-5241

WRIGHT ENGINEERING, LTD.
CIVIL ENGINEERS
188 MERCHANTS ROW – P.O. BOX 178
RUTLAND, VERMONT 05702-0178
802-775-2511 FAX 775-8815

ROBT W. HALL
CONSULTING ENGINEERS, INC.
640 MEADOW STREET EXTENSION, STE. 2
AGAWAM, MASSACHUSETTS 01001-0002
413-789-0860 FAX 789-3295

T.J. BOYLE AND ASSOCIATES
LANDSCAPE ARCHITECTS
301 COLLEGE STREET
BURLINGTON, VERMONT 05401
802-658-3555 FAX 863-1563

STATE OF VERMONT MARK P YOUNGSTROM No. 3477 LICENSED PROFESSIONAL ENGINEER 1-25-00

PROJECT NO.IM 091-1 (30)

SOUTHEAST VERMONT WELCOME CENTER
GUILFORD, VERMONT

SHEET TITLE: STORMWATER INFILTRATION SYSTEM PLAN AND DETAILS

DSGN BY: JAC
DRWN BY:
CHKD BY: JAC
CHKD BY: MPY

STATE OF VERMONT
AGENCY OF ADMINISTRATION
DEPARTMENT OF
BUILDINGS & GENERAL SERVICES

DATE: 1-16-98 SHEET NO._____OF_____SHEETS

C25

C:\ACAD12\95010N\95014C25A Fri Jan 21 14:05:25 2000