NOTES

1. ONLY LIGHTWEIGHT MAILBOXES MADE OF LIGHT SHEET METAL OR PLASTIC SHALL BE USED. MAILBOXES SHALL MEET REQUIREMENTS AND APPROVAL OF THE U.S. POSTAL SERVICE.
2. AN ALTERNATE MAILBOX SUPPORT STRUCTURE DESIGN AND CONSTRUCTION MAY BE USED AS LONG AS PROVEN CRASHWORTHY AND MEETS GUIDELINES AS SET OUT IN AASHTO'S "GUIDE FOR ERECTING MAILBOXES ON HIGHWAYS". SUPPORT STRUCTURE SHALL ALSO MEET REQUIREMENTS OF THE U.S. POSTAL SERVICE.
3. MAILBOX TURNOUT SHALL MEET B-17 STANDARD AS SET OUT IN "STATE OF VERMONT AGENCY OF TRANSPORTATION DESIGN STANDARDS FOR ROAD AND BRIDGE CONSTRUCTION".
4. IF THE STANDARD TURNOUT OFFSET CANNOT BE ATTAINED DUE TO RIGHT-OF-WAY CONSTRAINTS OR OTHER REASONS THE TURNOUT SHALL BE MODIFIED AS DIRECTED BY THE ENGINEER.

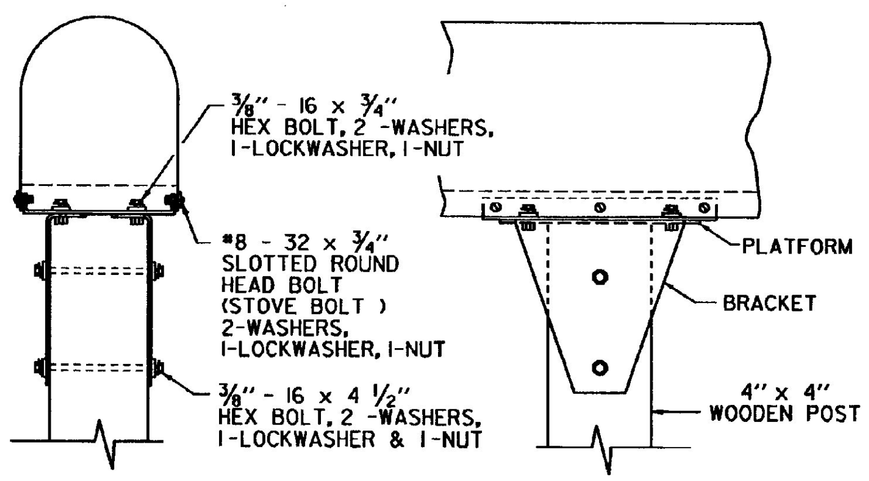

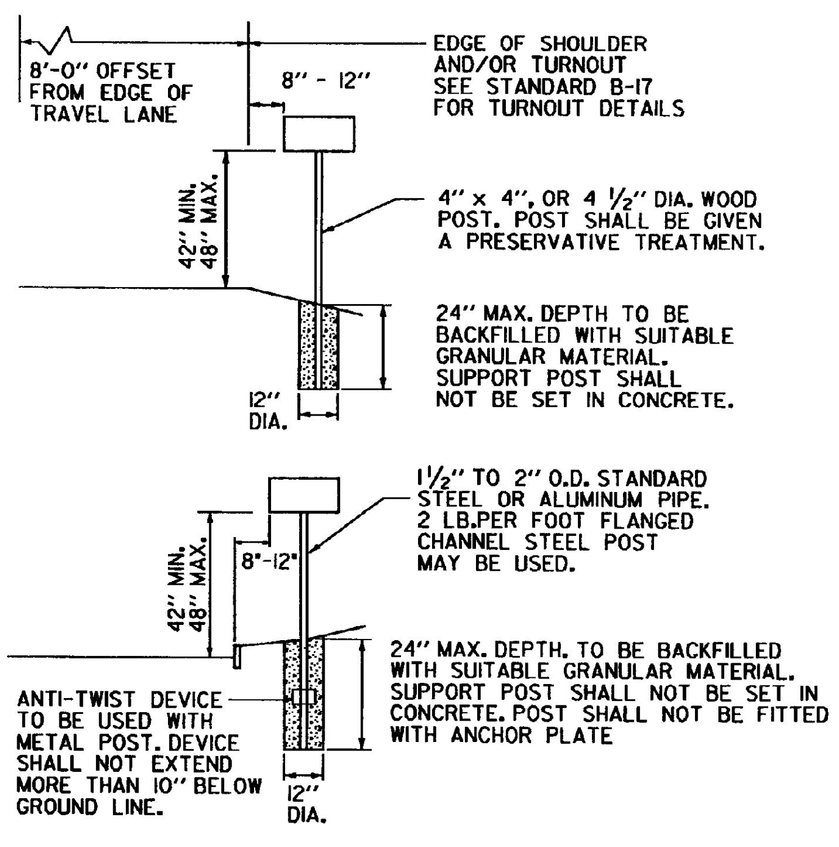

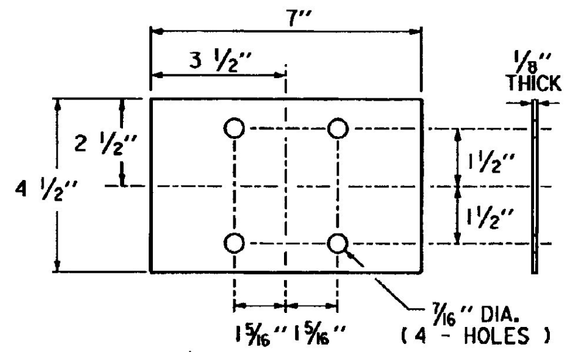

ANTI-TWIST DEVICE DETAIL FOR METAL PIPE

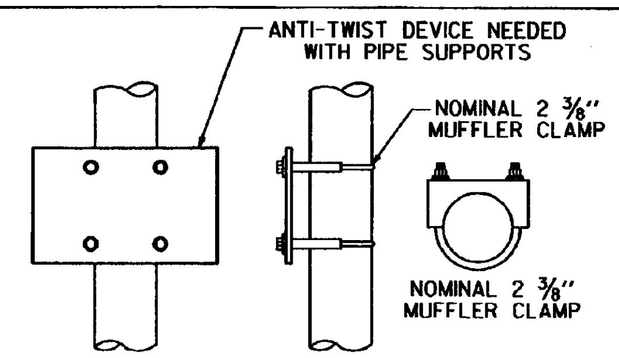

ANTI-TWIST DEVICE ASSEMBLY FOR METAL PIPES (USED FOR SINGLE AND MULTIPLE INSTALLATIONS)

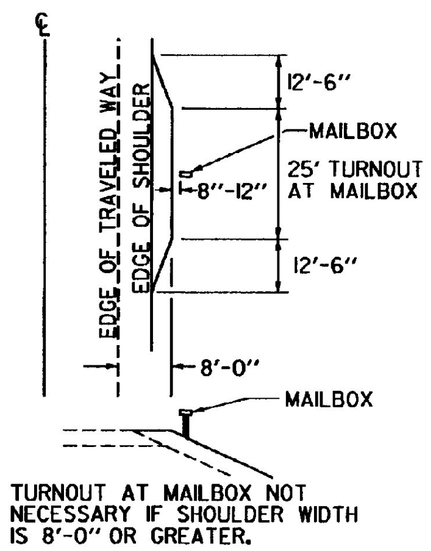

TURNOUT AT MAILBOX NOT NECESSARY IF SHOULDER WIDTH IS 8'-0" OR GREATER.

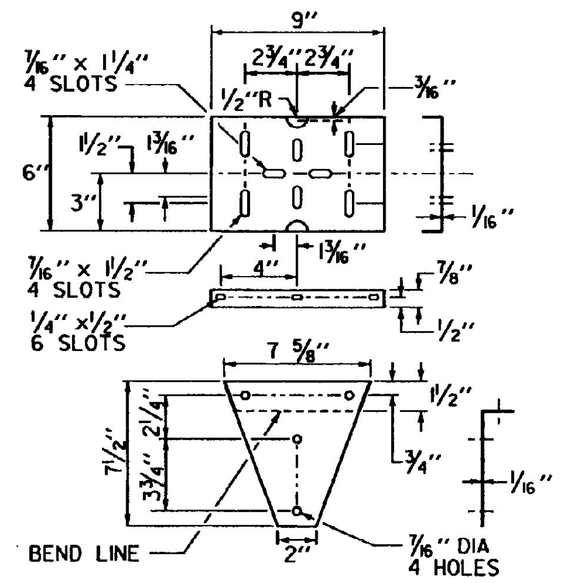

SINGLE MAILBOX SUPPORT

PLATFORM AND BRACKET DETAIL FOR METAL OR WOOD POSTS (USED FOR SINGLE AND MULTIPLE BOXES)

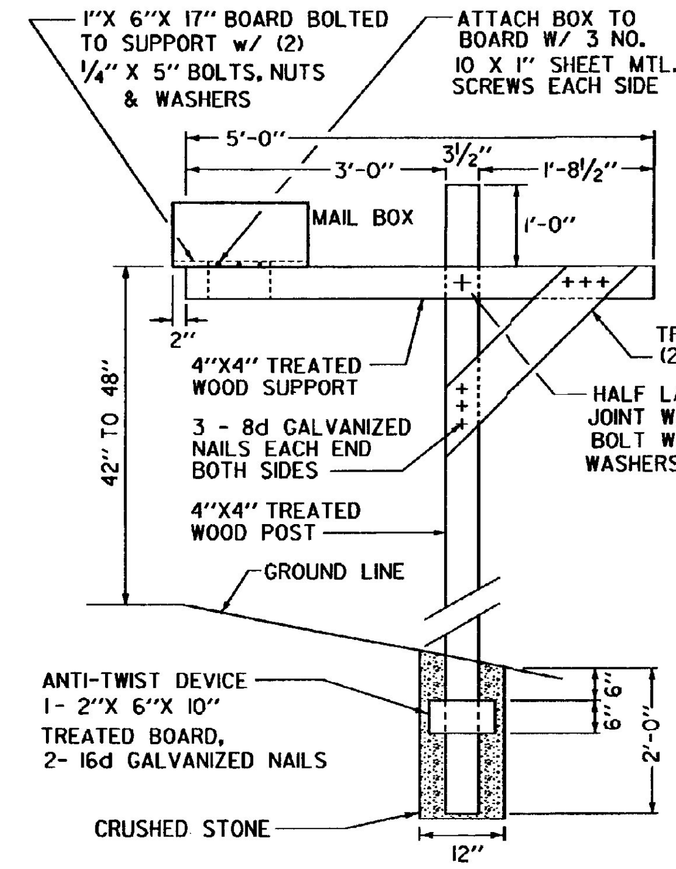

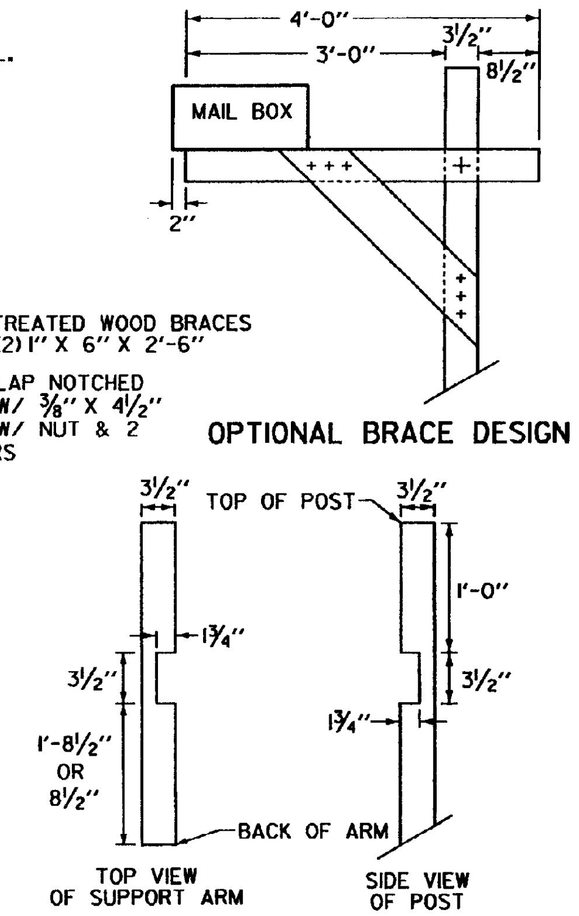

CANTILEVER TYPE MAILBOX SINGLE SUPPORT

NOTE: ALL WOOD DIMENSIONS ARE NOMINAL SIZE

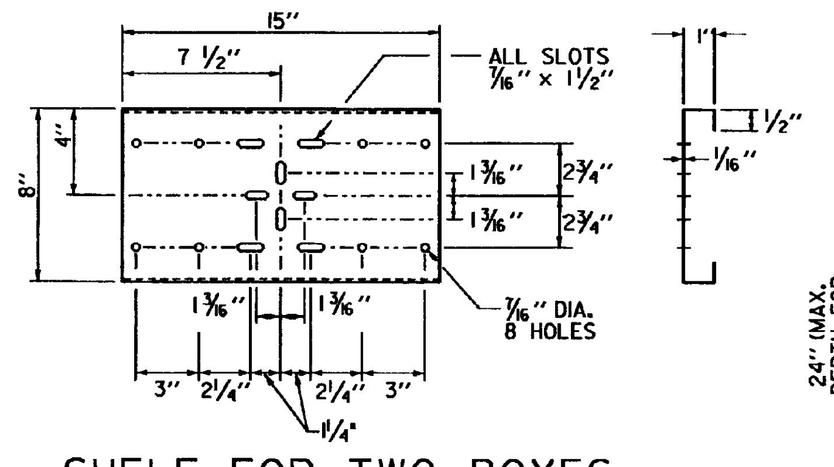

SHELF FOR TWO BOXES

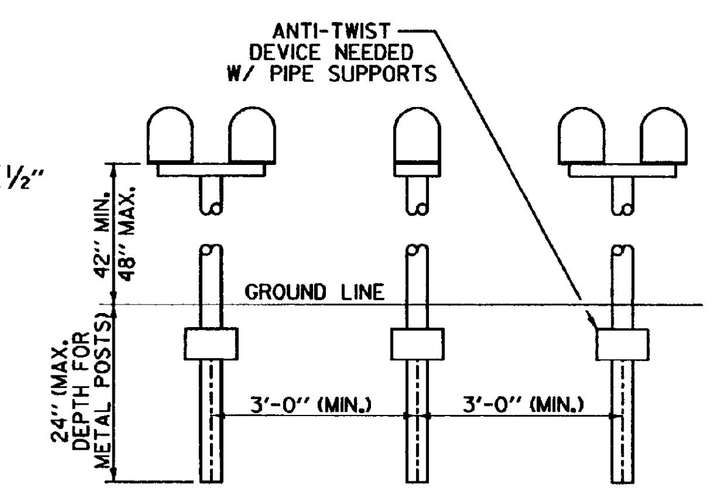

SPACING FOR MULTIPLE POST INSTALLATION

(APPLIES TO BOTH SINGLE AND MULTIPLE MAILBOX SUPPORTS)

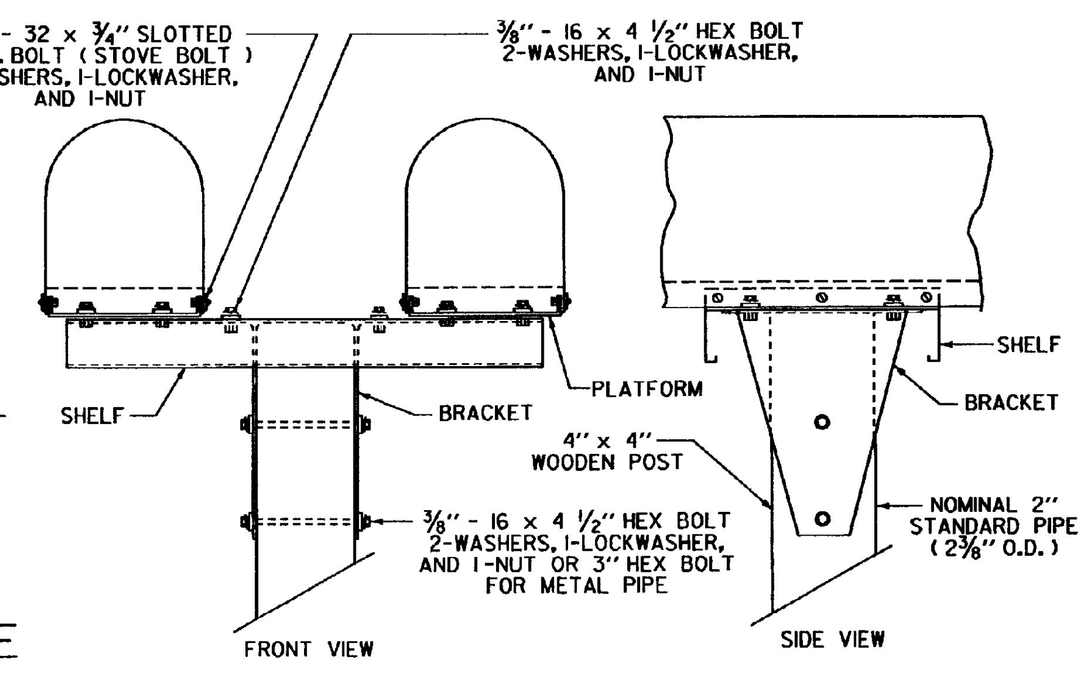

MULTIPLE MAILBOX SUPPORT

REVISIONS AND CORRECTIONS

AUGUST 7, 1995 ORIGINAL APPROVAL

APPROVED

APPROVED FOR THIS PROJECT AND/OR DESIGN IMPLEMENTATION. FHWA FINAL APPROVAL PENDING.

DIRECTOR OF ENGINEERING

DESIGN ENGINEER

MAILBOX SUPPORT DETAIL
(SINGLE AND MULTIPLE SUPPORT)

VERMONT AGENCY OF TRANSPORTATION

STANDARD

J-3