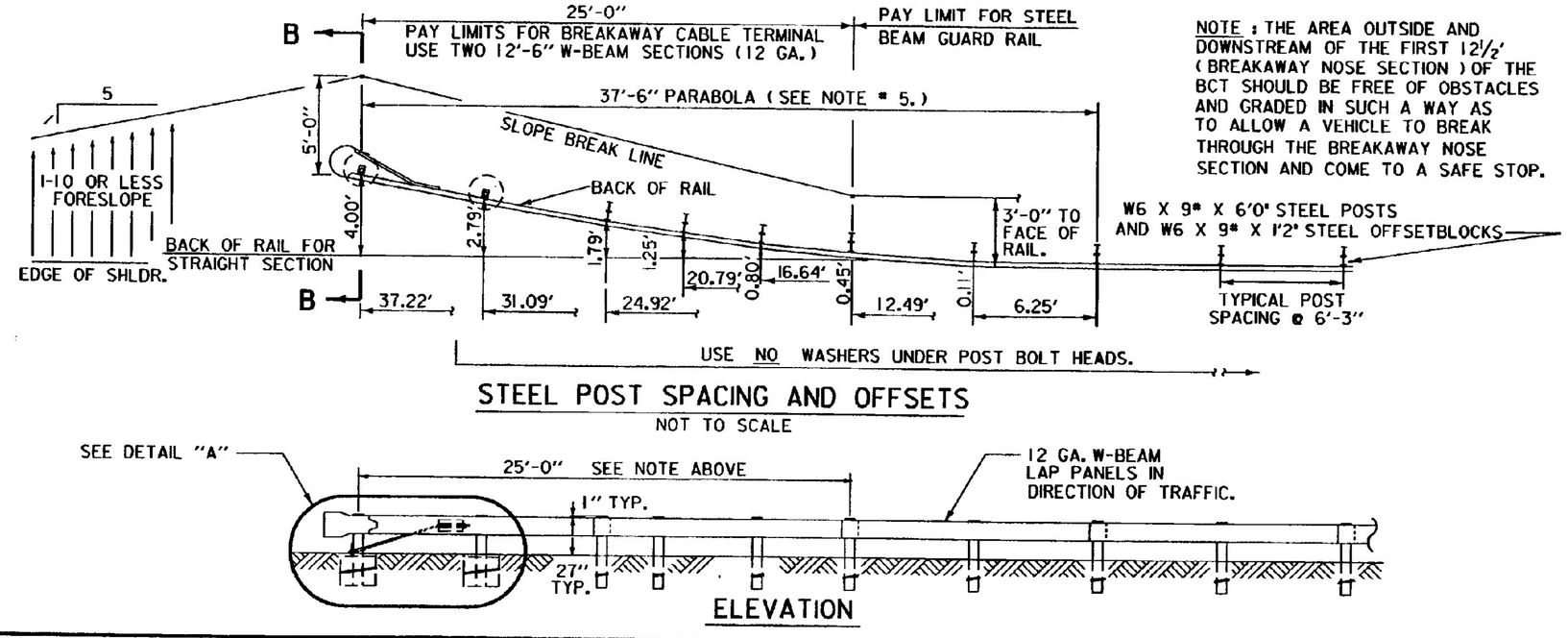

NOTE : THE AREA OUTSIDE AND DOWNSTREAM OF THE FIRST 12½' (BREAKAWAY NOSE SECTION) OF THE BCT SHOULD BE FREE OF OBSTACLES AND GRADED IN SUCH A WAY AS TO ALLOW A VEHICLE TO BREAK THROUGH THE BREAKAWAY NOSE SECTION AND COME TO A SAFE STOP.

STEEL POST SPACING AND OFFSETS

NOT TO SCALE

ELEVATION

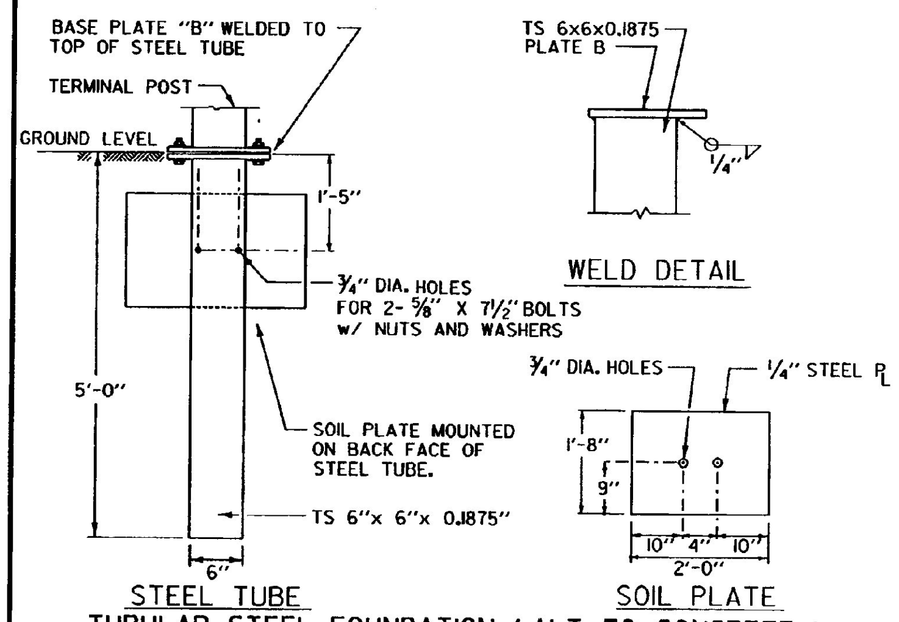

TUBULAR STEEL FOUNDATION (ALT. TO CONCRETE)
DETAIL "C"

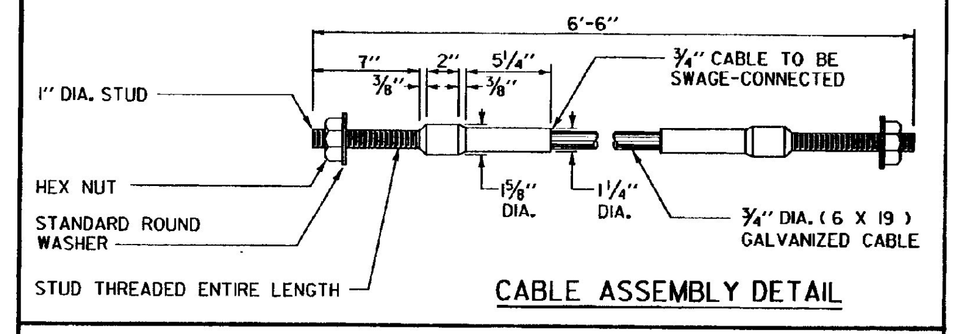

CABLE ASSEMBLY DETAIL

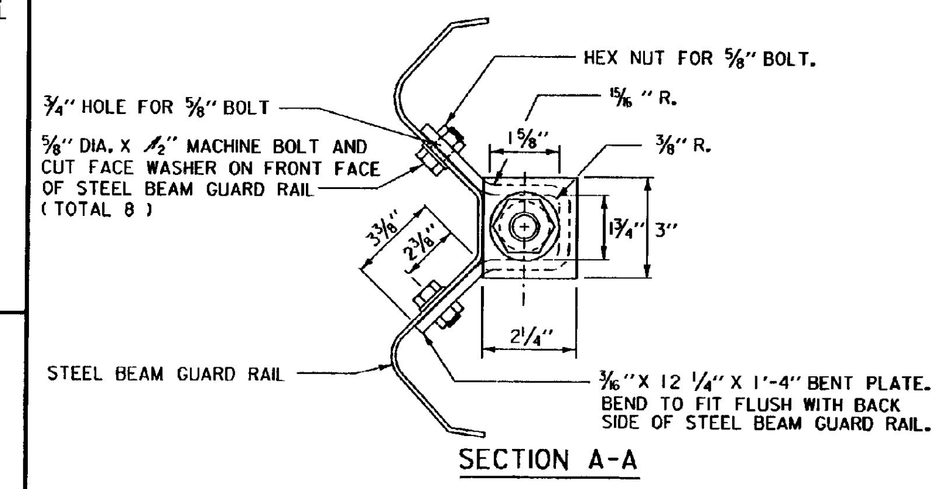

SECTION A-A

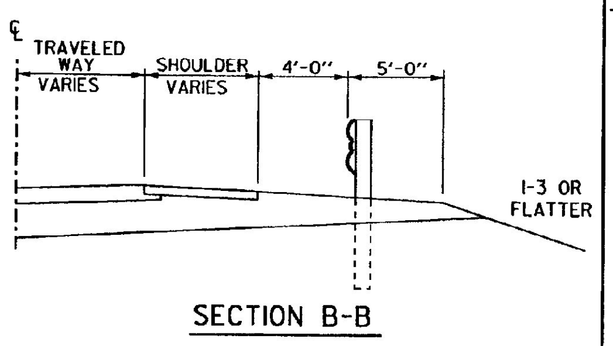

SECTION B-B

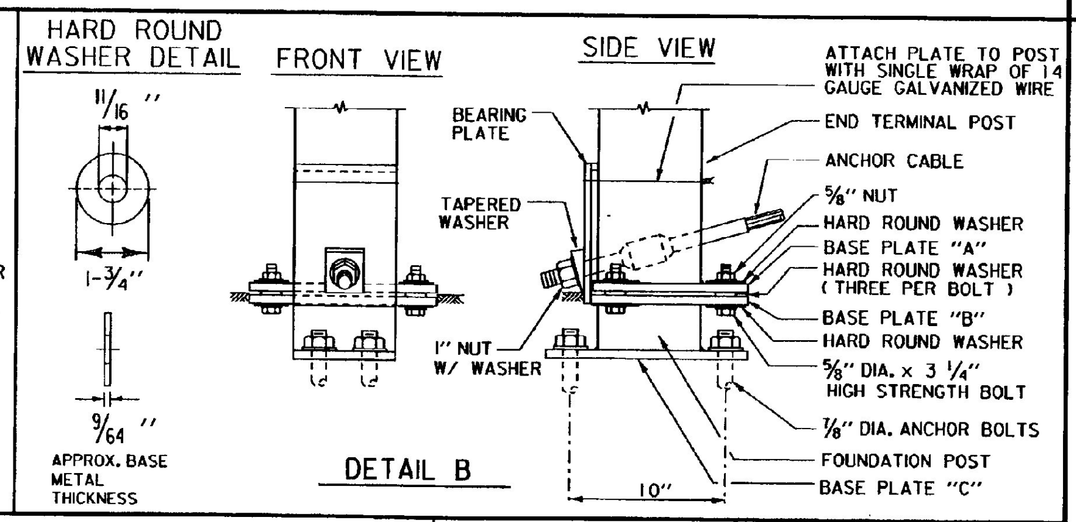

DETAIL B

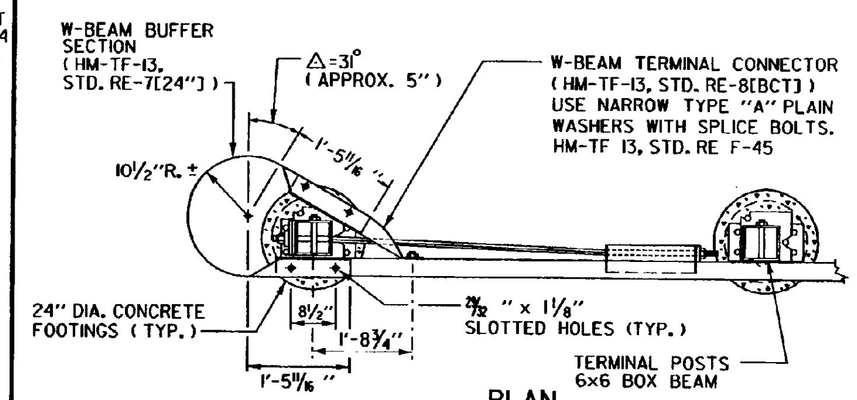

PLAN

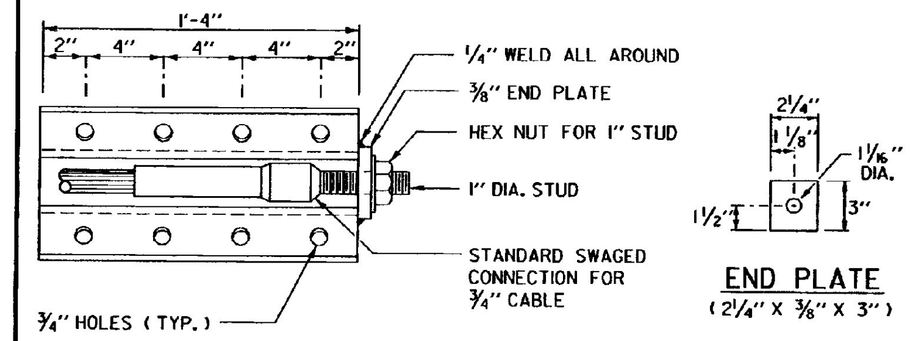

END PLATE
(2¼" X ⅜" X 3")

ANCHOR PLATE DETAIL

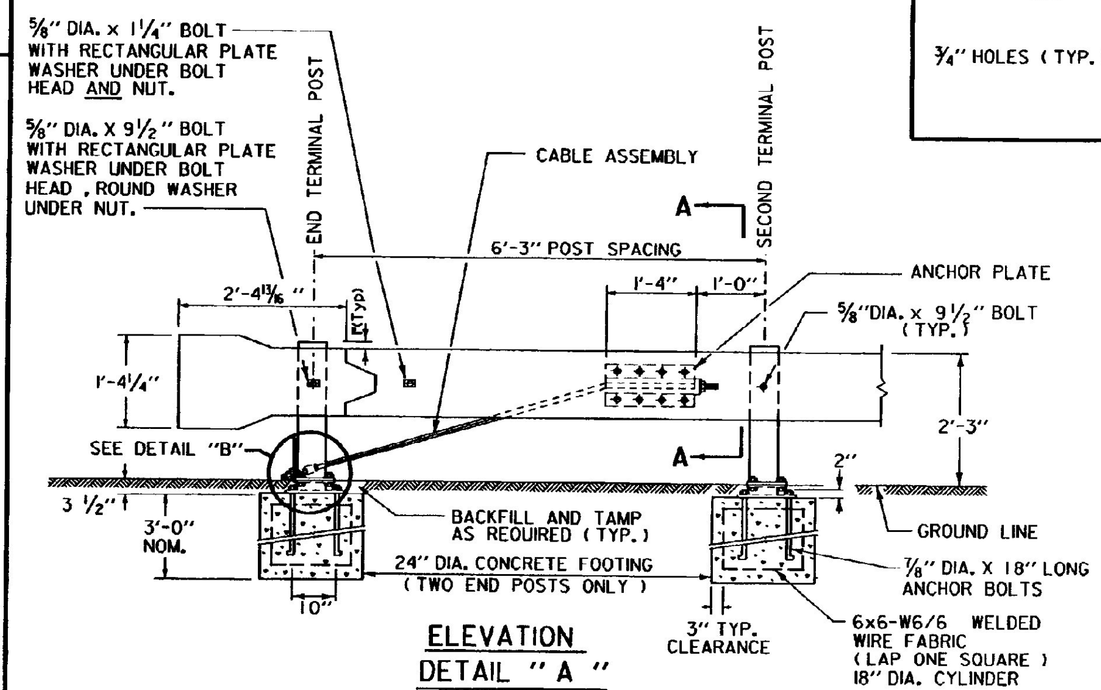

ELEVATION
DETAIL "A"

NOTES

1. OTHER ANCHOR CABLE ASSEMBLIES MAY BE USED. MINIMUM BREAKING STRENGTH OF ASSEMBLY SHALL BE 40,000 LBS.
2. CONCRETE FOR FOOTINGS SHALL BE CLASS B. TUBULAR STEEL FOUNDATION MAY BE USED AS AN ALTERNATIVE TO CONCRETE FOOTINGS. (SEE DETAIL "C")
3. FOR CONCRETE FOOTINGS IN SANDY AREAS, CONSIDERATION FOR INCREASING THE SIZE OF THE FOOTING IS SUGGESTED.
4. THE SLIP BASE SHALL BE CONTROLLED BY THE USE OF NUTS WITH A BUILT-IN TORQUE OR BY A TORQUE WRENCH CAPABLE OF ESTABLISHING A TORQUE OF 155 TO 170 FT-LBS.
5. STANDARD SHEET G-1 WILL BE USED IN CONJUNCTION WITH THIS STANDARD.
6. USE 12" LONG W-BEAM BACK-UP PLATE AT POSTS WHERE W-BEAM SPLICE DOES NOT OCCUR.
7. FOR ADDITIONAL DETAILS ON HARDWARE, SEE THE LATEST EDITION OF AASHTO-AGC-ARTBA PUBLICATION "A GUIDE TO STANDARDIZED HIGHWAY BARRIER RAIL HARDWARE".

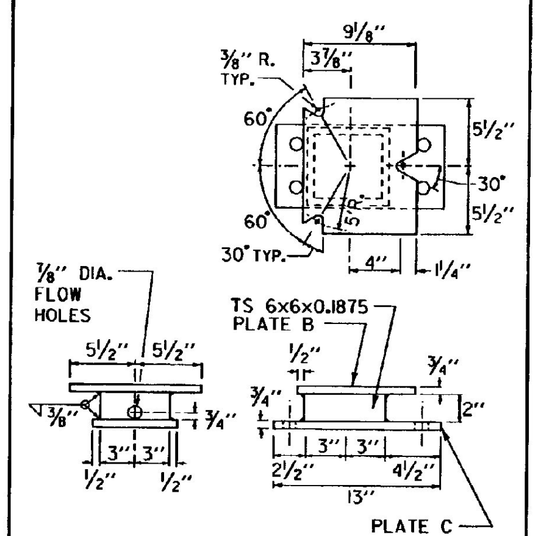

FOUNDATION POST

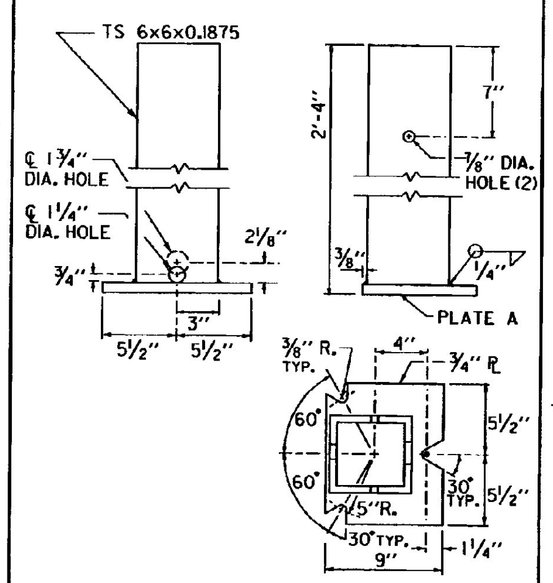

TERMINAL POSTS

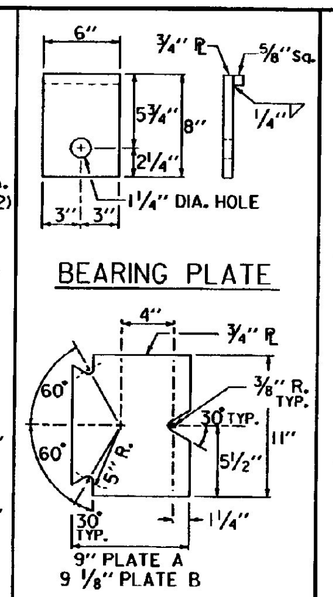

BASE PLATES A & B

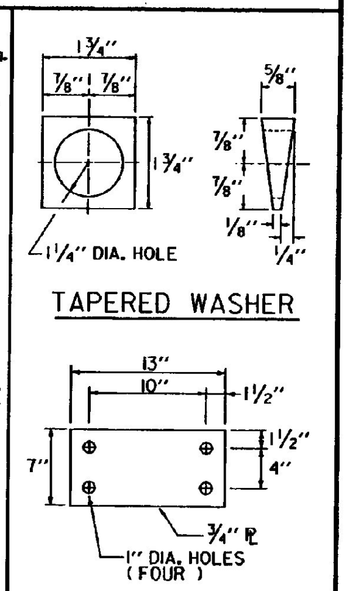

BASE PLATE C

REVISIONS AND CORRECTIONS

JULY 15, 1976 - ORIGINAL APPROVAL DATE
NOV. 13, 1989 - REMOVED NOTE ABOUT FLAT PLATE WASHERS
APR. 4, 1990 - ADDED DETAIL FOR HARD ROUND WASHER
JUNE 1, 1994 - REISSUED, WITHOUT CHANGE, UNDER NEW SIGNATURES.

APPROVED

APPROVED FOR THIS PROJECT AND/OR DESIGN IMPLEMENTATION. FHWA FINAL APPROVAL PENDING.

Gordon H. MacArthur, P.E.
DIRECTOR OF ENGINEERING

Robert M. Murphy, P.E.
DESIGN ENGINEER

NOT TO SCALE

BREAKAWAY CABLE TERMINAL WITH STEEL POSTS

VERMONT AGENCY OF TRANSPORTATION

STANDARD
G-15