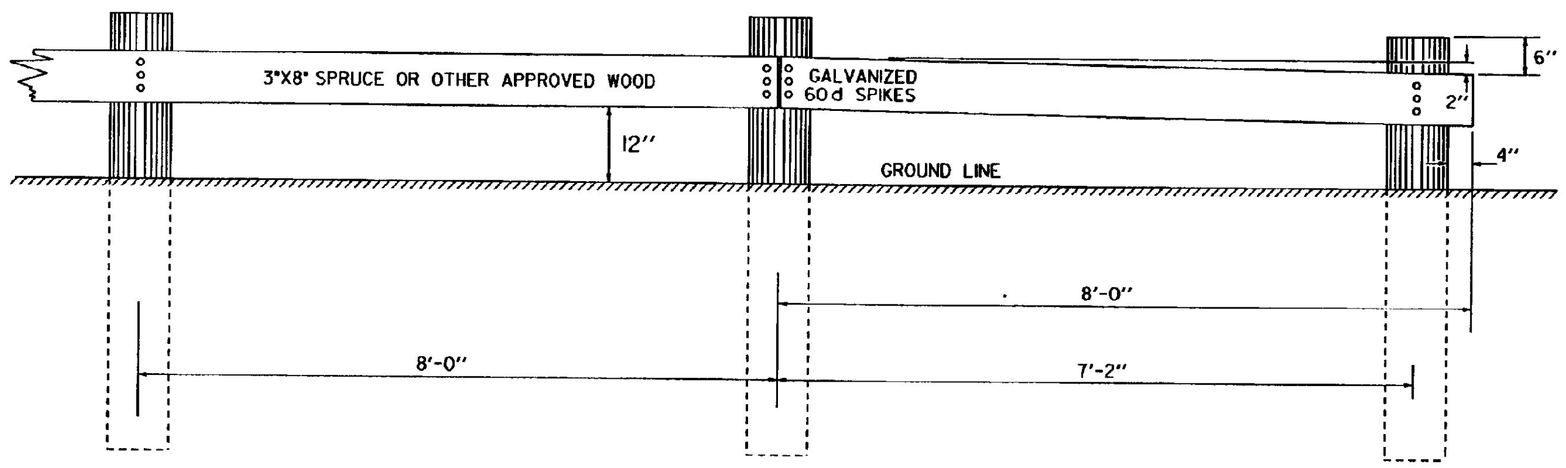

PLANK SIXTEEN FEET IN LENGTH TO BE USED WHEREVER POSSIBLE.
POSTS SIX (6) INCHES SQUARE MAY BE USED IN PLACE OF ROUND POSTS.
FIRST AND LAST POSTS OF EACH SECTION TO BE SET BACK TWELVE INCHES FROM THE GENERAL LINE OF POSTS, WHEN FOUR OR MORE POSTS ARE REQUIRED.
REFLECTIVE MATERIAL TO BE PLACED AS DIRECTED BY THE ENGINEER.
ALL WOOD MEMBERS SHALL BE GIVEN A PRESERATIVE TREATMENT.

PLANK RAIL

TO BE USED AS A BARRICADE OFF THE HIGHWAY

NOTCH TO BE TREATED WITH PRESERVATIVE BEFORE ERECTING PLANK.

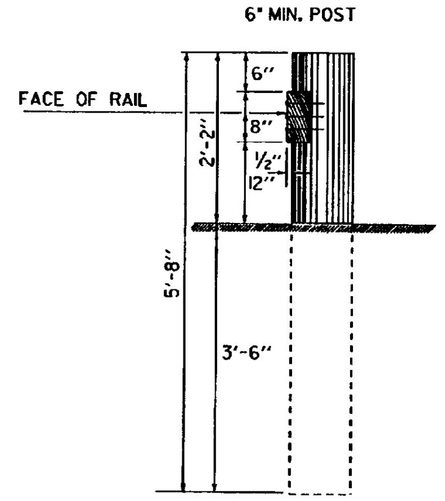

3" X 1½" REFLECTIVE ALUMINUM STRIP TO BE PLACED ON EVERY OTHER WOOD POST IN A LINE OF POSTS AND CLEARLY VISIBLE TO APPROACHING TRAFFIC.
STRIPS TO BE ATTACHED TO THE DESIGNATED RAIL POSTS ON BOTH SIDES OF THE ROAD AND VISIBLE TO TRAFFIC IN BOTH DIRECTIONS.

REFLECTIVE MATERIAL SHALL MEET THE REQUIREMENTS OF SUBSECTION 750.09 AND SHALL BE OF ENCAPSULATED LENS SILVER OR AMBER.

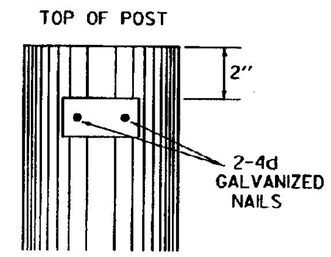

DELINEATION OF WOOD RAIL AND GUIDE POSTS

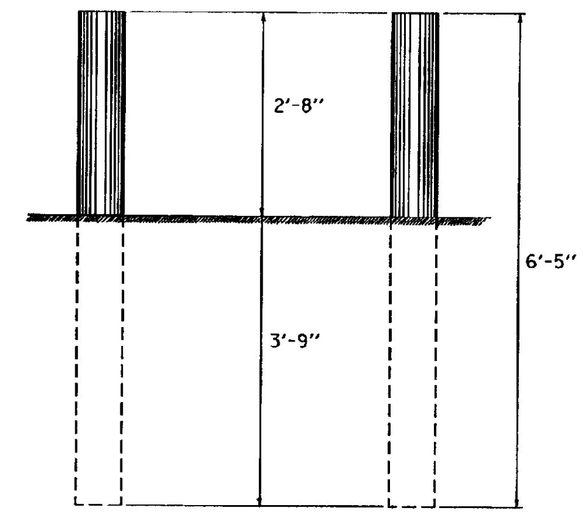

MARKER POSTS ARE TO BE 4" TO 5½" IN DIAMETER AND ARE TO BE PLACED AS DIRECTED BY THE ENGINEER.
POSTS SHALL BE GIVEN A PRESERVATIVE TREATMENT.

WOOD MARKER POSTS

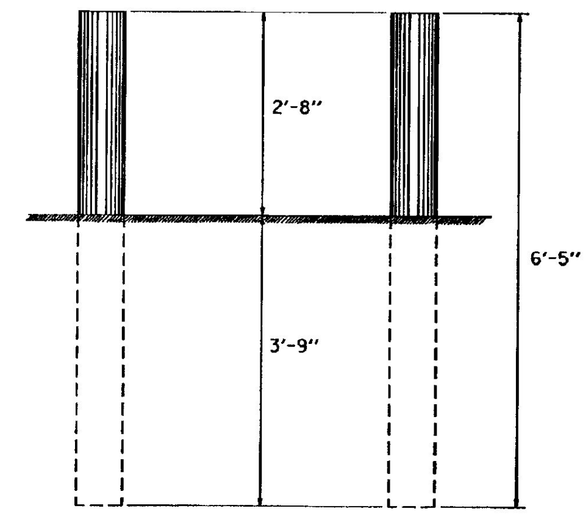

REFLECTIVE MATERIAL TO BE PLACED AS DIRECTED BY THE ENGINEER.

POSTS ARE TO BE 4" TO 5½" IN DIAMETER AND ARE TO BE PLACED AS DIRECTED BY THE ENGINEER.
POSTS SHALL BE GIVEN A PRESERVATIVE TREATMENT

WOOD GUIDE POSTS

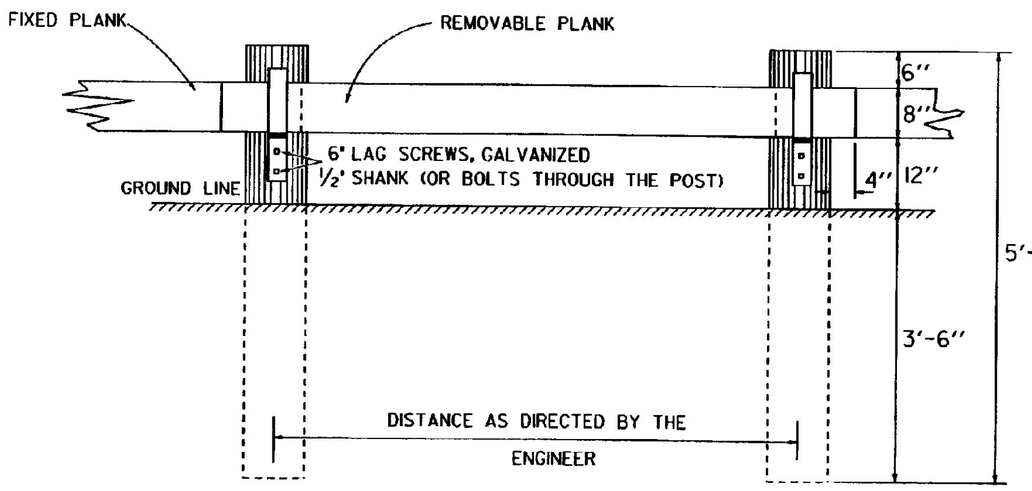

ENTRANCE THROUGH PLANK RAIL

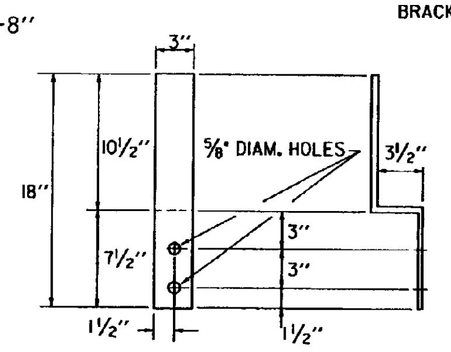

BRACKET DETAIL

GALVANIZED METAL BRACKETS ARE TO BE INCLUDED IN THE UNIT BID PRICE FOR PLANK RAIL.

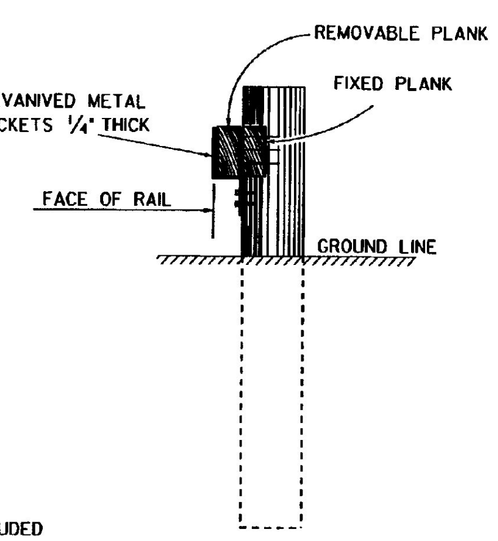

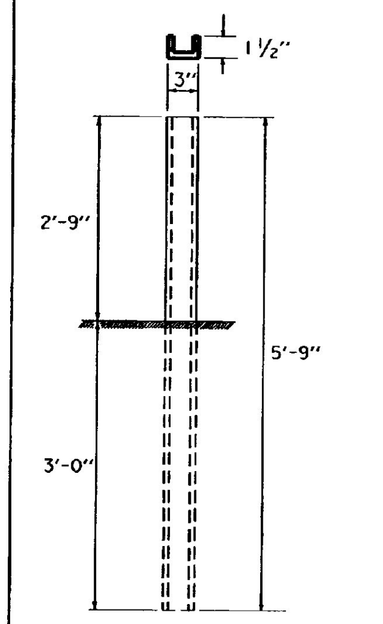

ALL STEEL MARKER POSTS TO BE GALVANIZED.
STEEL MARKER POSTS TO BE PLACED AS DIRECTED BY THE ENGINEER.

POSTS ARE TO BE AMERICAN STANDARD CHANNEL 5'-9" X 3". (4.1 LBS. PER FT.)

STEEL MARKER POSTS

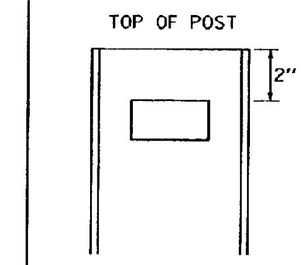

3" X 1½" REFLECTIVE STRIP TO BE APPLIED TO EVERY OTHER POST IN A LINE OF POSTS AND CLEARLY VISIBLE TO APPROACHING TRAFFIC.
STRIPS TO BE APPLIED TO THE DESIGNATED POSTS ON BOTH SIDES OF THE ROAD AND VISIBLE TO TRAFFIC IN BOTH DIRECTIONS.
REFLECTIVE MATERIAL SHALL MEET THE REQUIREMENTS OF SUBSECTION 750.09 AND SHALL BE OF ENCAPSULATED LENS SILVER OR AMBER.

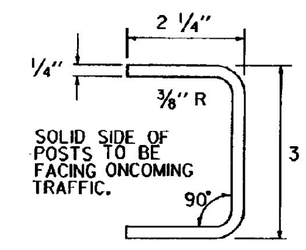

ALTERNATE POST

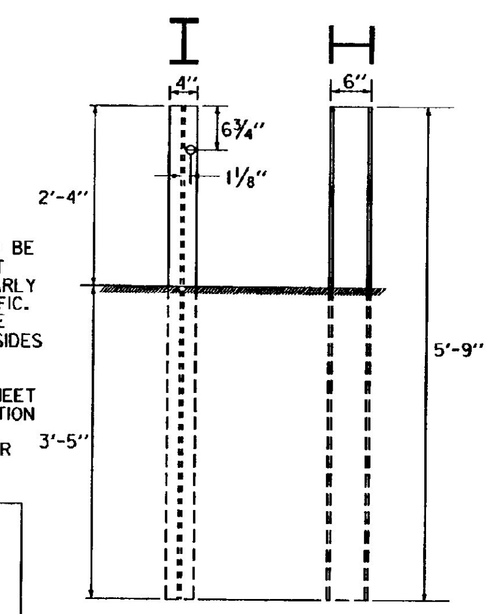

ALL STEEL GUIDE POSTS TO BE GALVANIZED.
REFLECTIVE MATERIAL TO BE PLACED AS DIRECTED BY THE ENGINEER.
POSTS ARE TO BE 5'-9" X 6" X 4" (8.5 LBS. PER FT.).

ALL POSTS IN A GIVEN RUN OF BARRIER TO BE UNIFORM.

STEEL GUIDE POSTS

REVISIONS AND CORRECTIONS

DEC. 8, 1971 - ORIGINAL APPROVAL DATE
MAY 23, 1974 - ALTERNATE POST ADDED
MAY 29, 1979 - NOTE ON REFLECTIVE MATERIAL CHANGED
JULY 23, 1980 - CHANGED DIAMETER OF WOOD MARKER POST & WOOD GUIDE POST
MAY 25, 1982 - REMOVED ALTERNATE POST DETAIL
OCT. 31, 1985 - REVISED TO CONFORM TO 1986 SPECIFICATIONS
JUNE 1, 1994 - REISSUED, WITHOUT CHANGE, UNDER NEW SIGNATURES.

APPROVED

APPROVED FOR THIS PROJECT AND/OR DESIGN IMPLEMENTATION. FHWA FINAL APPROVAL PENDING.

Gordon R. MacArthur, P.E.
DIRECTOR OF ENGINEERING

Martin Murphy, PE
DESIGN ENGINEER

PLANK RAIL
GUIDE POSTS
WOOD MARKER POSTS
STEEL MARKER POSTS

VERMONT AGENCY OF TRANSPORTATION

STANDARD
G-4