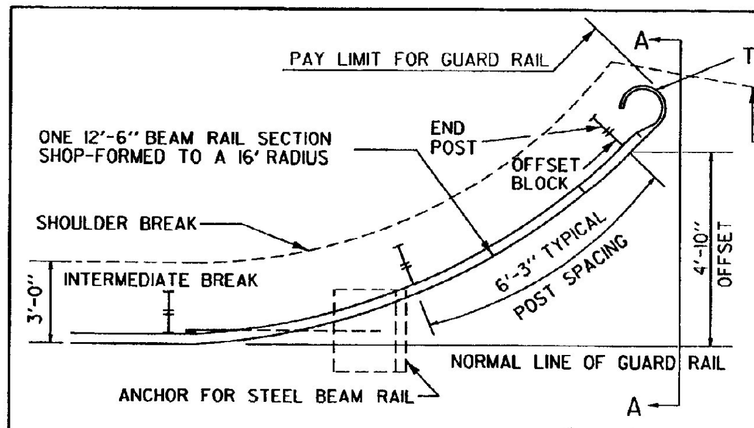

APPROACH END DETAIL
(NOT APPROVED FOR USE WHERE V > 40 MPH)

DIRECTION OF TRAFFIC

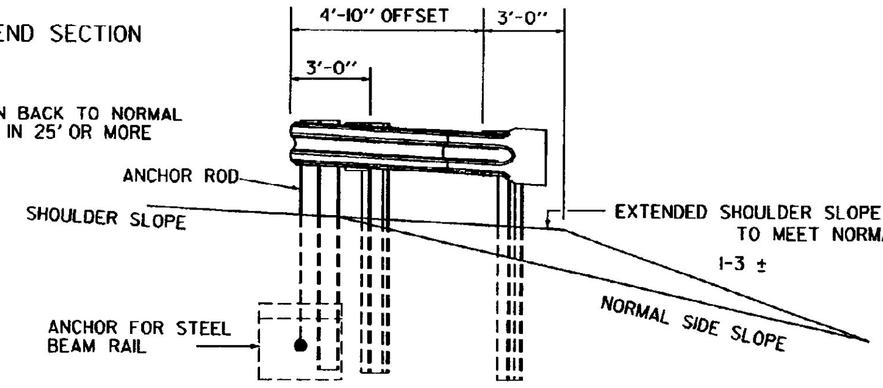

SECTION A-A

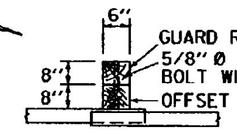

WITH 6" x 8 " WOOD POST

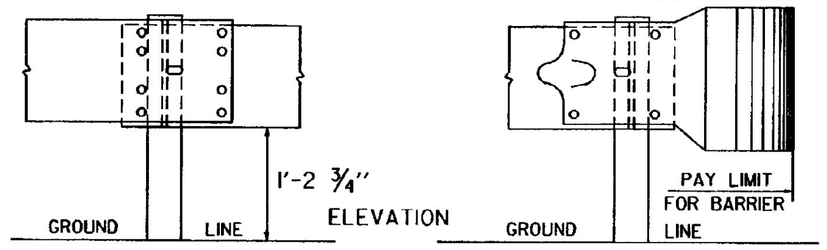

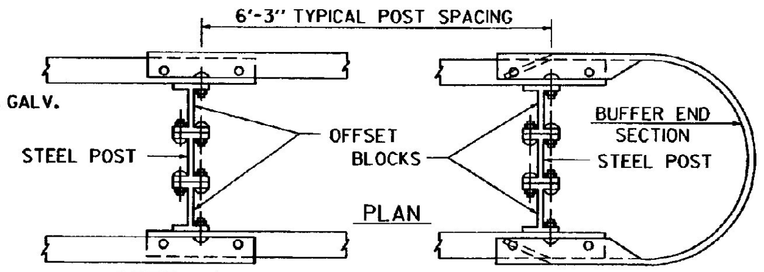

STEEL BEAM MEDIAN BARRIER

BARRIER END

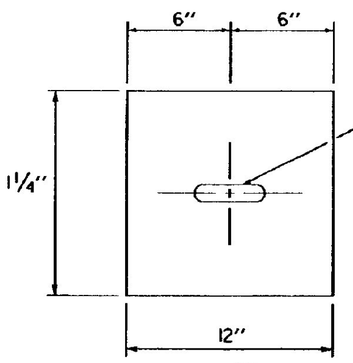

USE A 12" LONG FORMED BACK-UP PLATE OF STEEL BEAM GUARD RAIL AT EACH POST WHERE THERE IS A SINGLE THICKNESS OF BEAM RAIL. (NOT REQUIRED WITH WOOD POST SYSTEM).

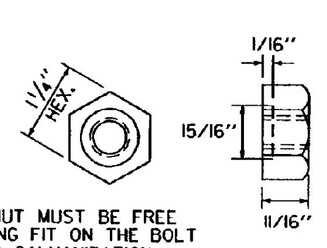

THE NUT MUST BE FREE RUNNING FIT ON THE BOLT AFTER GALVANIZATION.

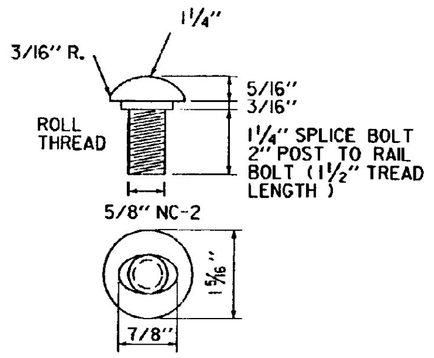

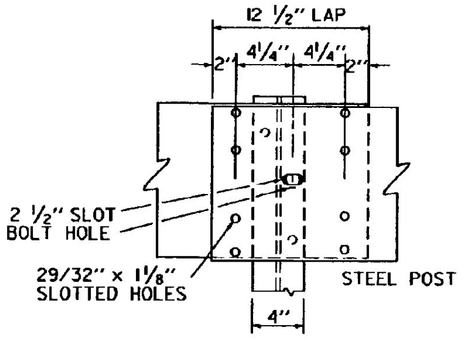

ELEVATION OF GUARD RAIL SPLICE AT POST

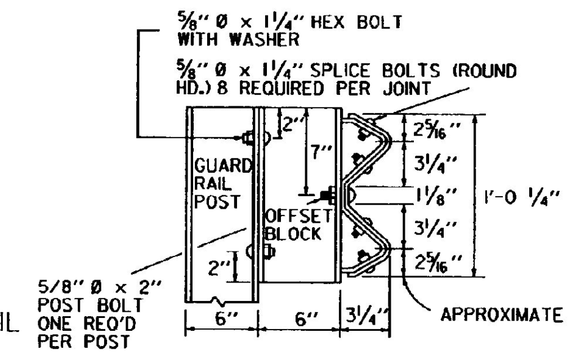

CROSS SECTION THROUGH GUARD RAIL SPLICE

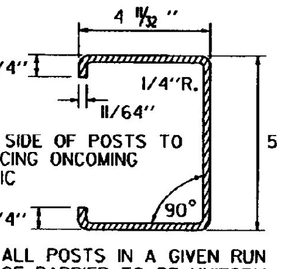

ALL POSTS IN A GIVEN RUN OF BARRIER TO BE UNIFORM

ALTERNATE POST

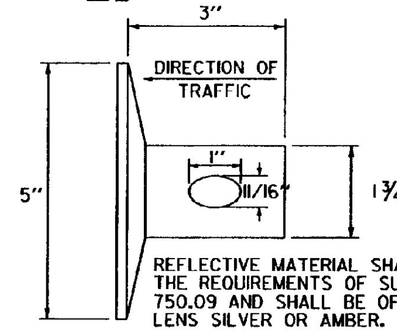

REFLECTIVE MATERIAL SHALL MEET THE REQUIREMENTS OF SUBSECTION 750.09 AND SHALL BE OF ENCAPSULATED LENS SILVER OR AMBER.

THIS REFLECTORIZED ALUMINUM WASHER IS TO BE PLACED IN VALLEY OF BEAM WHEN MOUNTING BEAM ONTO EACH FIFTH POST. WASHER SHALL MEET SPECIFICATION REQUIREMENTS FOR A.S.T.M. B-209 ALLOY 5052-H-32.

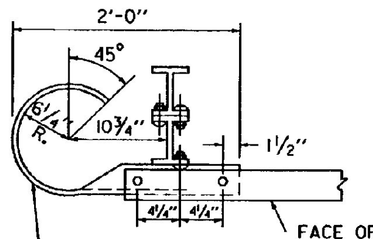

TERMINAL END SECTION

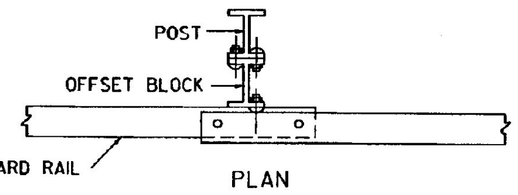

PLAN

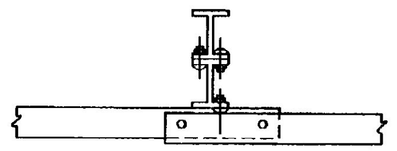

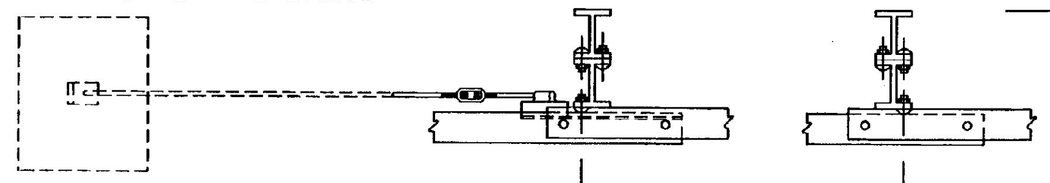

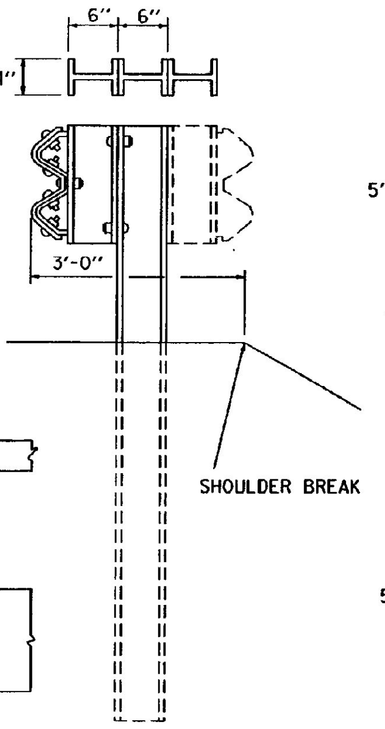

SIDE ELEVATION OF POST FOR SHOULDER OR MEDIAN INSTALLATION

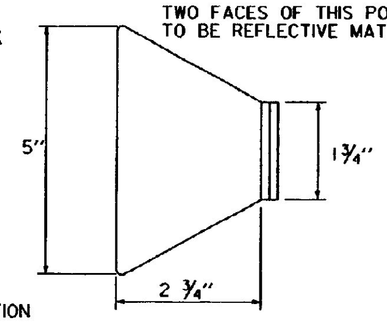

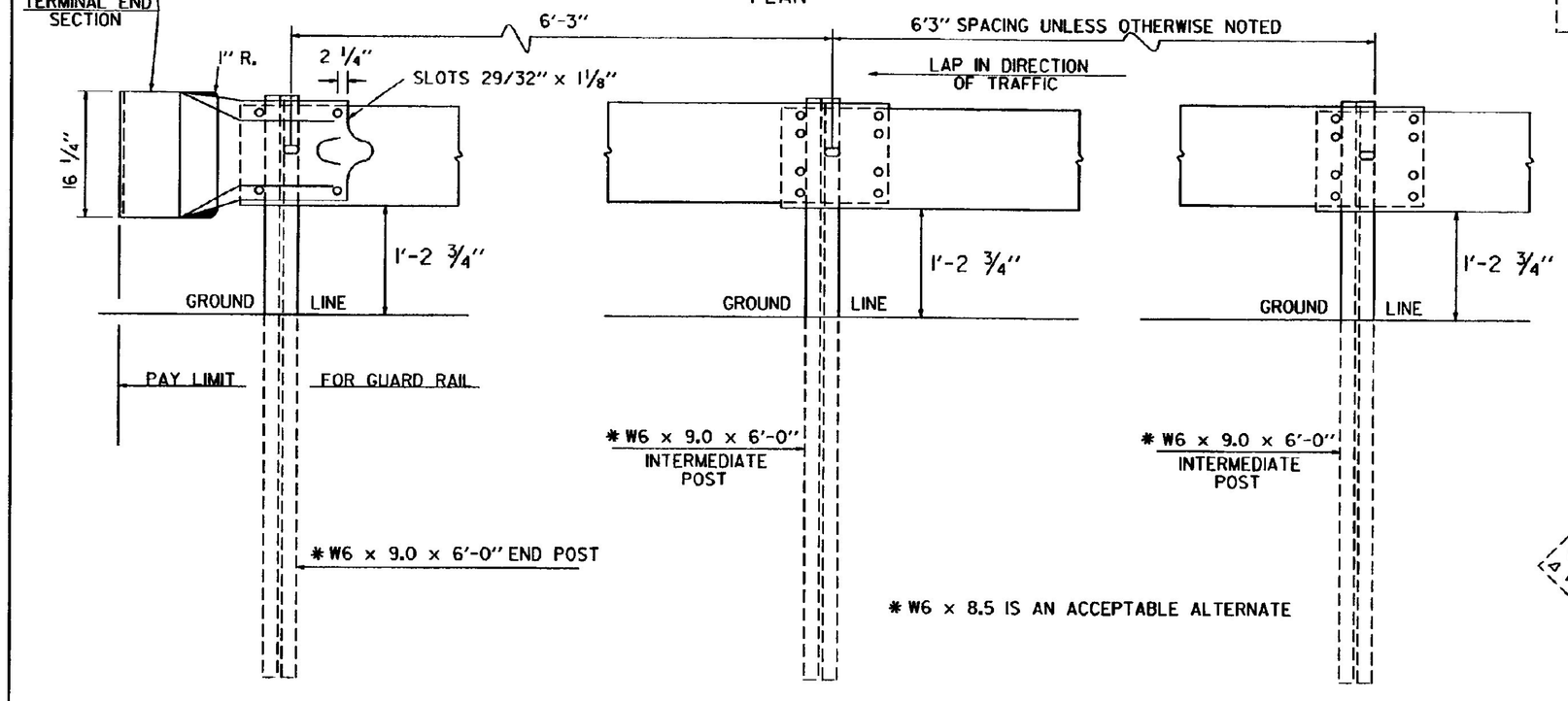

ASSEMBLY ELEVATION

STANDARD SHEET G-1 TO BE USED IN CONJUNCTION WITH THIS SHEET WHEN ANCHOR FOR STEEL BEAM GUARD RAIL IS REQUIRED.

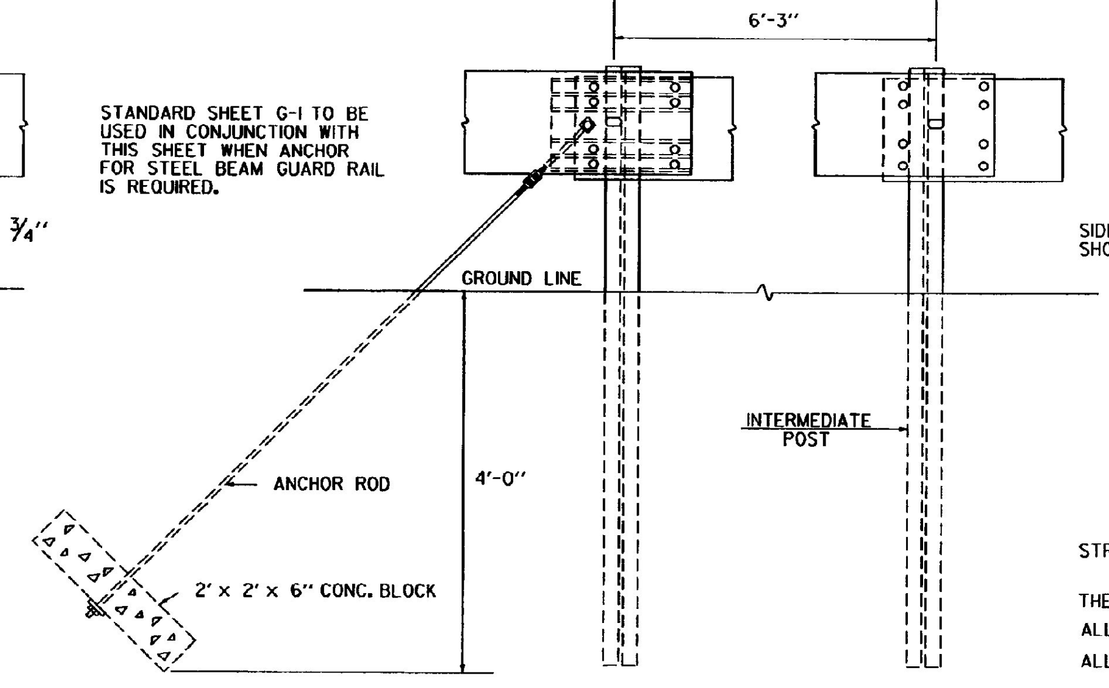

ANCHOR FOR STEEL BEAM RAIL

BEAM	MIN. GAGE	TENSILE STRENGTH (LBS.)	RAIL OR JOINT BEAM STRENGTH: TRAFFIC FACE UP LOAD (LBS.)	TRAFFIC FACE UP MAXIMUM DEF. (INCHES)	TRAFFIC FACE DOWN LOAD (LBS.)	TRAFFIC FACE DOWN MAXIMUM DEF. (INCHES)
STANDARD	12	80,000	1,500 2,000	2" 3"	1,200 1,600	2" 3"
HEAVY DUTY	10	100,000	2,000 3,000	2" 3"	1,600 2,400	2" 3"

STRENGTH - RAIL ELEMENT SHALL BE DESIGNED TO MEET THE REQUIREMENTS OF THE ABOVE TABLE.

THE POST CONNECTION SHALL WITHSTAND A 5,000 POUND SIDE PULL IN EITHER DIRECTION.

ALL METAL PARTS SHALL BE GALVANIZED.

ALL WOOD POSTS SHALL BE GIVEN A PRESERVATIVE TREATMENT.

STANDARD STEEL BEAM TO BE 12 GAGE AND THE HEAVY DUTY TO BE 10 GAGE.

REVISIONS AND CORRECTIONS

MAY 6, 1976 - ORIGINAL APPROVAL DATE
SEP. 10, 1976 - MINIMUM LENGTH & ADVANCE OF NEED NOTES REMOVED
MAR. 2, 1977 - ROUND WOOD POSTS REMOVED
SEPT. 12, 1977 - REFERENCE TO ROUND WOOD POSTS REMOVED
MAY 29, 1979 - NOTE ON REFLECTIVE MATERIAL CHANGED
APRIL 28, 1980 - APPROACH END DETAILS REDRAWN
DEC. 16, 1980 - INCREASED SHOULDER WIDENING FOR GUARD RAIL
JUNE 5, 1984 - POST SIZE AND BACK UP PLATE NOTE CHANGED
DEC. 21, 1984 - REMOVED POST WASHER
OCT. 31, 1985 - REVISED TO CONFORM TO 1986 SPECIFICATIONS
JUNE 1, 1994 - REISSUED, WITHOUT CHANGE. UNDER NEW SIGNATURES.

APPROVED

APPROVED FOR THIS PROJECT AND/OR DESIGN IMPLEMENTATION. FHWA FINAL APPROVAL PENDING.

Gordon D. MacArthur P.E.
DIRECTOR OF ENGINEERING

John M. Murphy PE
DESIGN ENGINEER

STEEL BEAM GUARD RAIL
HEAVY DUTY STEEL BEAM GUARD RAIL
STEEL BEAM MEDIAN BARRIER
ANCHOR FOR STEEL BEAM RAIL

VERMONT AGENCY OF TRANSPORTATION

STANDARD
G-1d