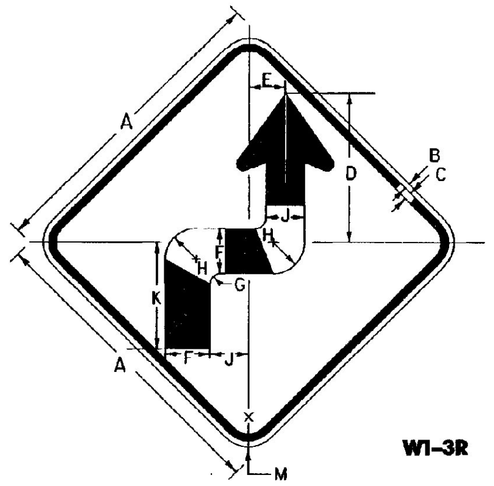

W1-3R

SIGN	DIMENSIONS (INCHES)											
	A	B	C	D	E	F	G	H	J	K	L	M
STD. & MIN.	36	5/8	7/8	17 7/16	4 7/32	5 1/4	1 1/4	3 5/8	4 1/2	12 15/32	1 21/32	2 1/4
SPECIAL	48	3/4	1 1/4	23 3/16	5 5/8	7	1 5/8	4 7/8	6	16 5/8	2 3/16	3

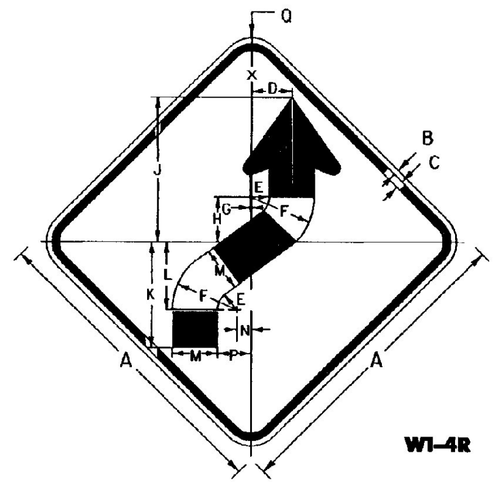

W1-4R

SIGN	DIMENSIONS (INCHES)														
	A	B	C	D	E	F	G	H	J	K	L	M	N	P	Q
STD. & MIN.	36	5/8	7/8	4 23/32	2 1/4	7 1/2	5/32	5 1/4	16 7/8	12 3/8	7 7/8	5 1/4	1 11/16	3 15/16	2 1/4
SPECIAL	48	3/4	1 1/4	6 5/16	3	10	3/16	7	22 1/2	16 1/2	10 1/2	7	2 1/4	5 1/4	3

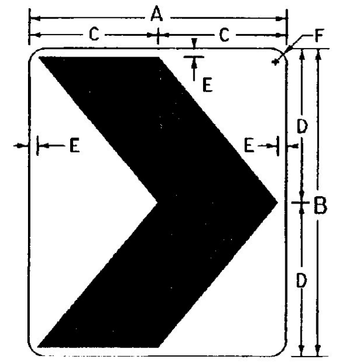

W1-8

SIGN	DIMENSIONS(INCHES)					
	A	B	C	D	E	F
STD.	18	24	9	12	3/4	1 1/2
SPECIAL	24	30	12	15	7/8	1 1/2
EXPWY.	30	36	15	18	1	1 7/8
FRWY.	36	48	18	24	1 1/8	2 1/4

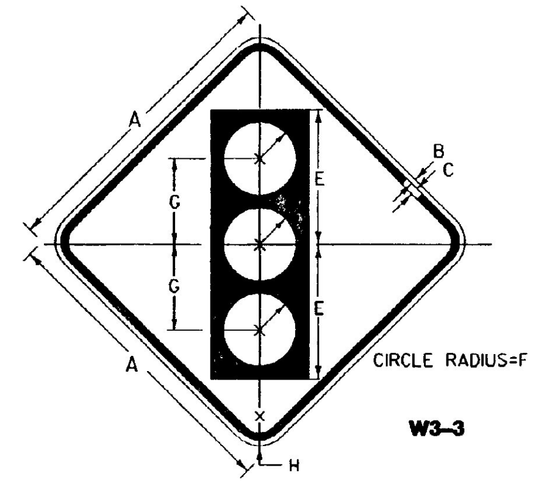

CIRCLE RADIUS=F

W3-3

SIGN	DIMENSIONS (INCHES)							
	A	B	C	D	E	F	G	H
STD. & MIN.	36	5/8	7/8	5 3/4	15 3/4	4 1/4	10	2 1/4
SPECIAL	48	3/4	1 1/4	7 1/2	20	5	12 1/2	3

COLORS

SYMBOL & LEGEND - BLACK (NON-REFL)
BACKGROUND - ORANGE (REFL)

TOP CIRCLE RED (REFL)
MIDDLE CIRCLE YELLOW (REFL)
BOTTOM CIRCLE GREEN (REFL)

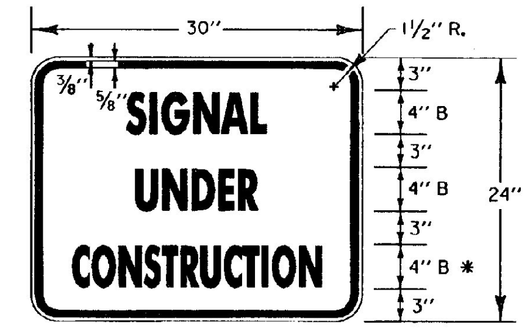

* REDUCE SPACING 50%

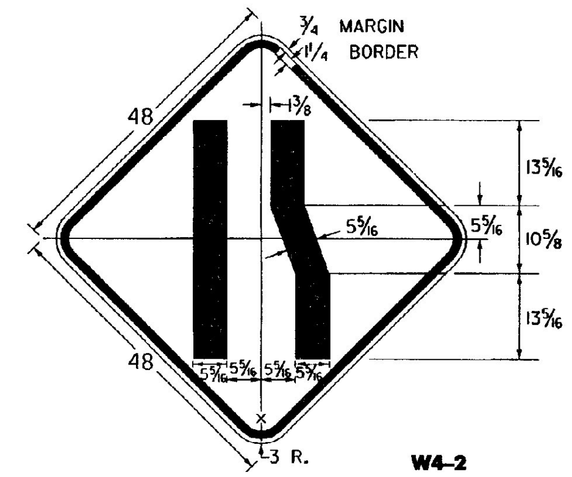

W4-2

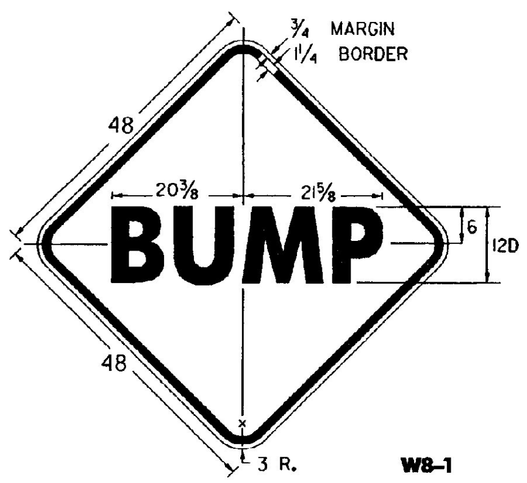

W8-1

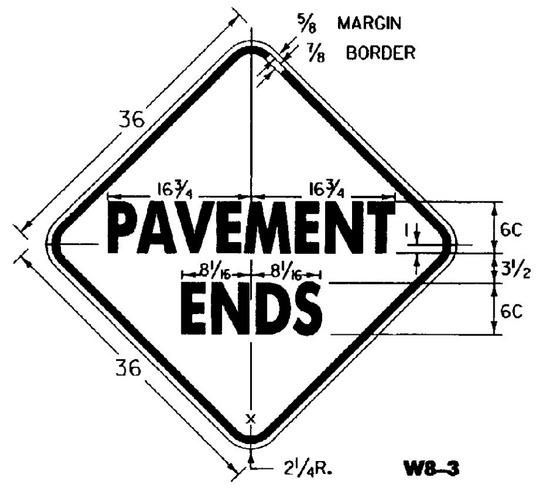

W8-3

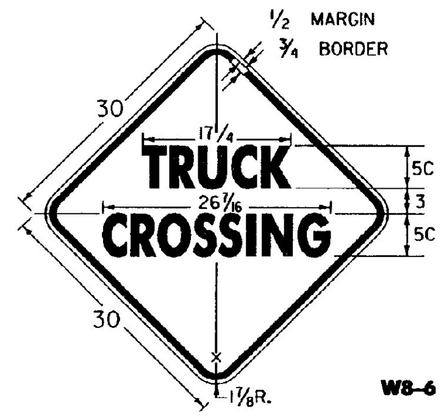

W8-6

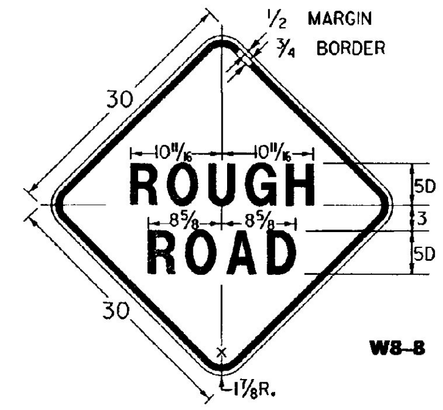

W8-8

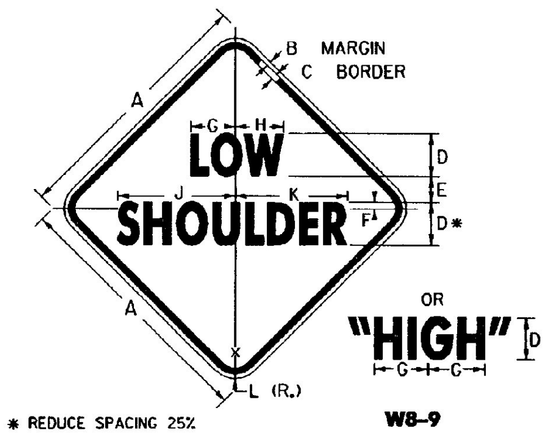

W8-9

* REDUCE SPACING 25%

SIGN	DIMENSIONS(INCHES)											
	A	B	C	D	E	F	G	H	J	K	L
STD.	30	1/2	3/4	5C	3	3/4	5 3/8	5 5/8	13 11/16	13 1/8	1 7/8
FWY.	48	3/4	1 1/4	8C	5	1 1/4	8 1/4	9	21 7/8	20 7/8	3

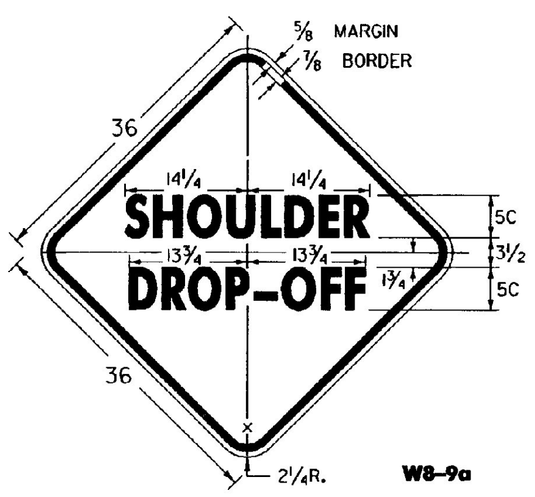

W8-9a

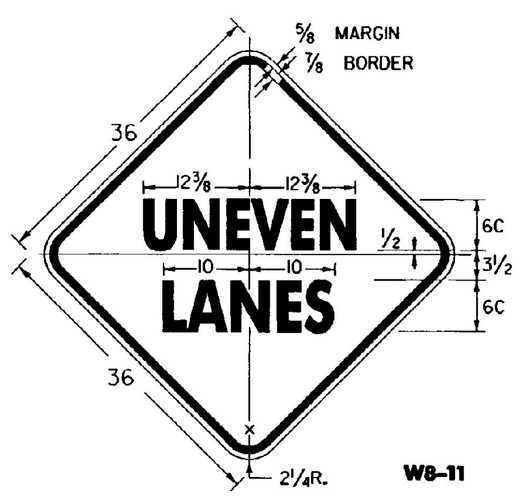

W8-11

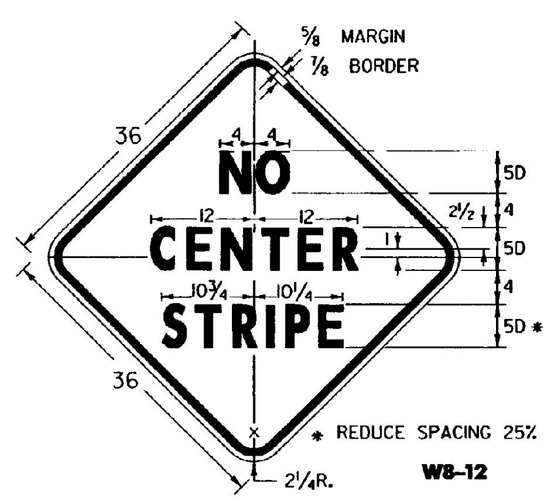

* REDUCE SPACING 25%

W8-12

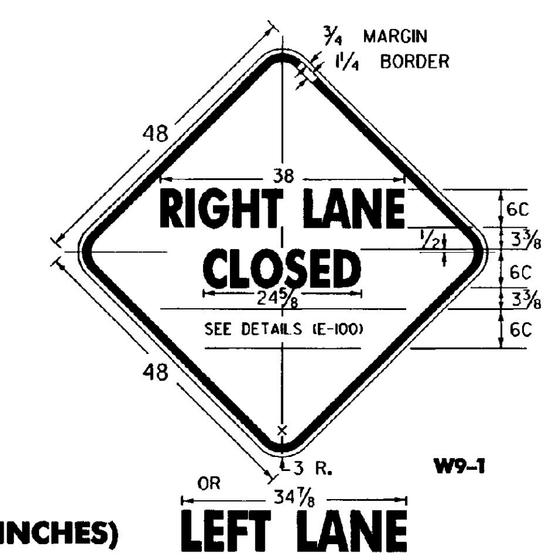

W9-1

(ALL DIMENSIONS SHOWN IN INCHES)

NOTES

SEE STANDARD SHEET E-100 FOR NOTES AND TEXT DETAILS

COLORS FOR SIGNS SHOWN ON THIS SHEET SHALL BE BLACK TEXT, BORDER AND SYMBOLS ON A REFLECTORIZED TYPE IIB OR TYPE III ORANGE BACKGROUND, UNLESS OTHERWISE NOTED.

SIGNS USED ONLY FOR DAYTIME MAINTENANCE OPERATIONS DO NOT NEED TO BE REFLECTORIZED. HOWEVER, THESE SIGNS SHALL BE LABELED "DAYTIME USE ONLY" ON THE BACK OF THE SIGN PANEL WITH 3" SERIES C LETTERS.

OTHER STDS. REQUIRED: E-100

REVISIONS AND CORRECTIONS

OCT. 30, 1987 - DATE OF ORIGINAL ISSUE
OCT. 21, 1992 - ADDED ADDITIONAL SIGN DIMENSIONS, REVISED CHEVRON BACKROUND TO ORANGE, & REVISED TITLE BLOCK
AUG. 08, 1995 - ADDED AND DELETED VARIOUS SIGN DETAILS

APPROVED FOR THIS PROJECT AND/OR DESIGN IMPLEMENTATION. FHWA FINAL APPROVAL PENDING.

APPROVED

DIRECTOR OF ENGINEERING

TRAFFIC AND SAFETY ENGINEER

CONSTRUCTION SIGN DETAILS

/traf/std/std101.dgn : std101.i

VERMONT AGENCY OF TRANSPORTATION

STANDARD

E-101